METAL EARTH™

3D LASER CUT MODELS

360° view

It is highly recommended that you visit
www.fascinations.com/metalearth360/mms302
to see the completed model before assembling your own

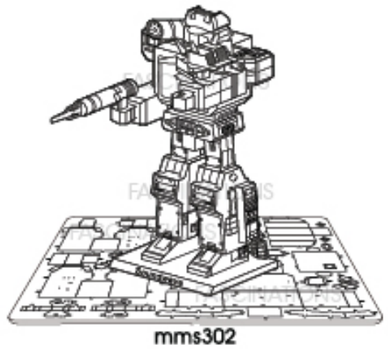

mms302

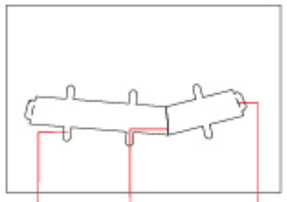

Insertion tabs are inserted and then folded

Fold lines can be seen as shown here

Insertion holes

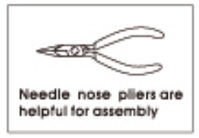

To create the best connections

- Insert tab and bend 90 degrees for most visible areas
- Insert tab and twist 90 degrees is best in some areas to ensure a tight connection

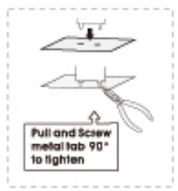

Metal sheets

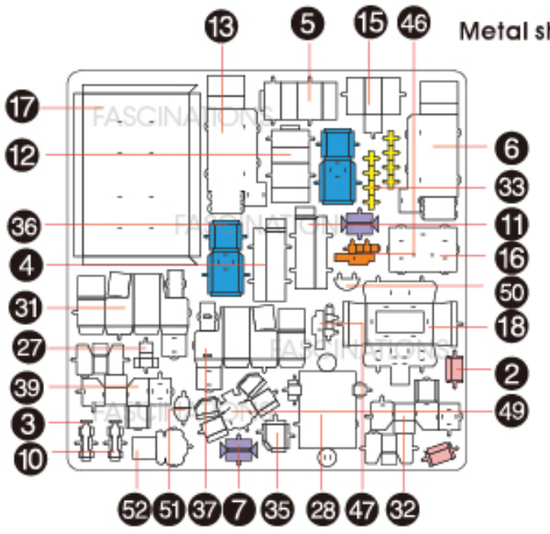

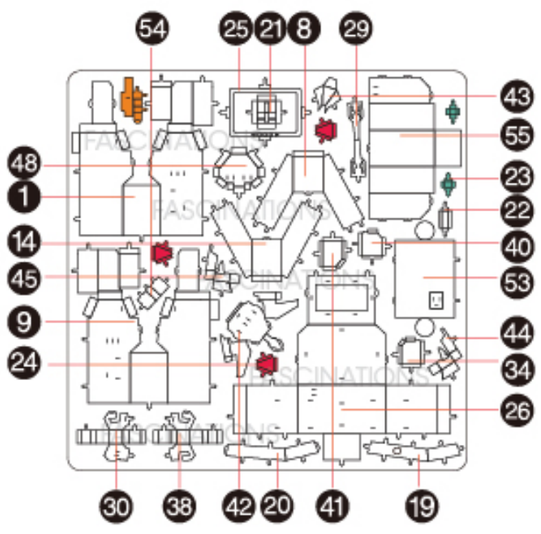

In order to avoid possible injury from sharp edges, please carefully discard the metal sheet after parts have been removed

Assembly Flow Chart

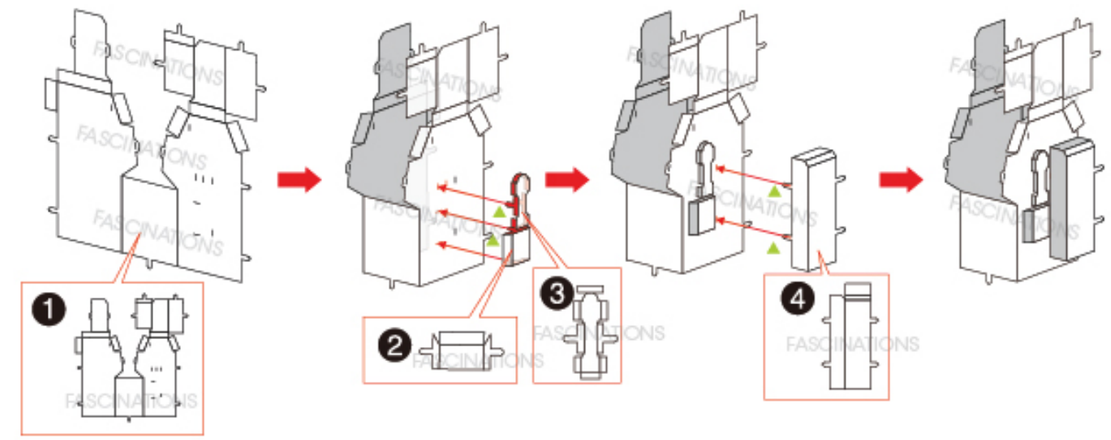

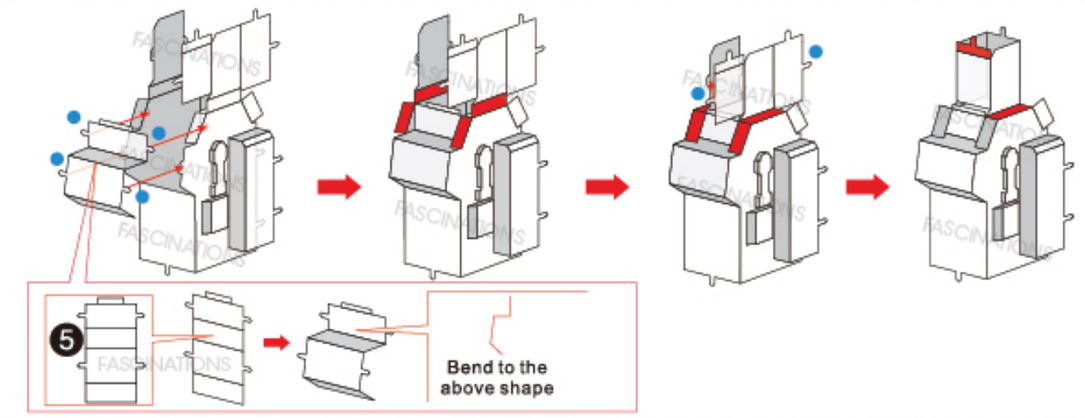

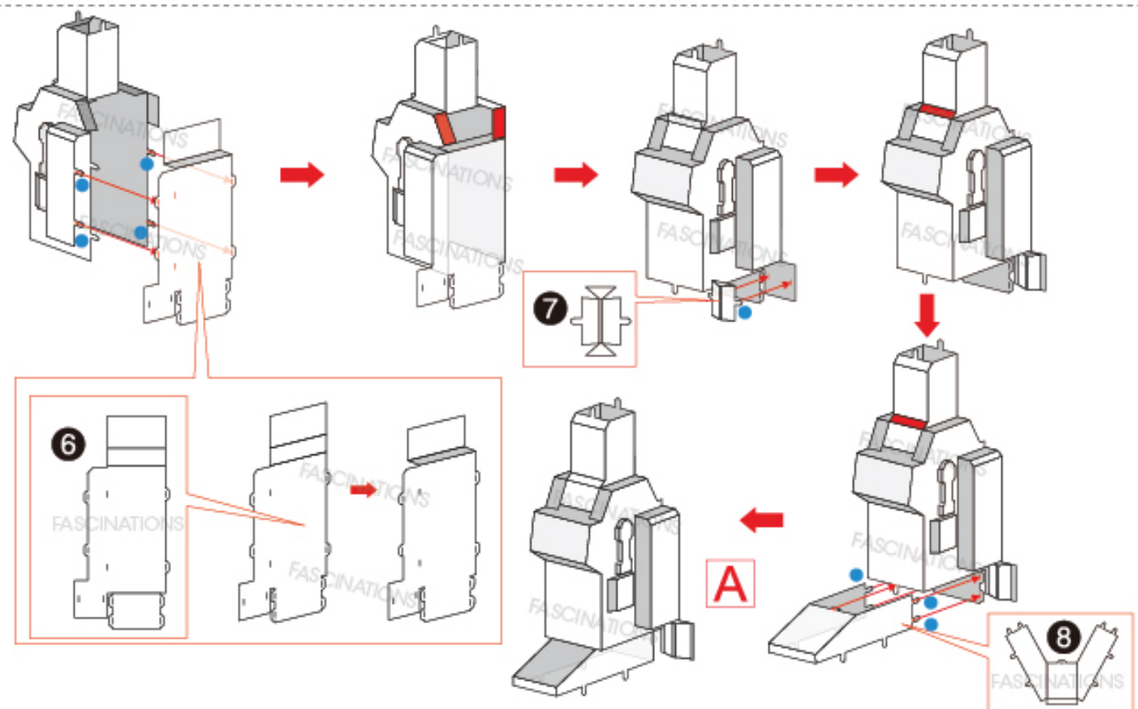

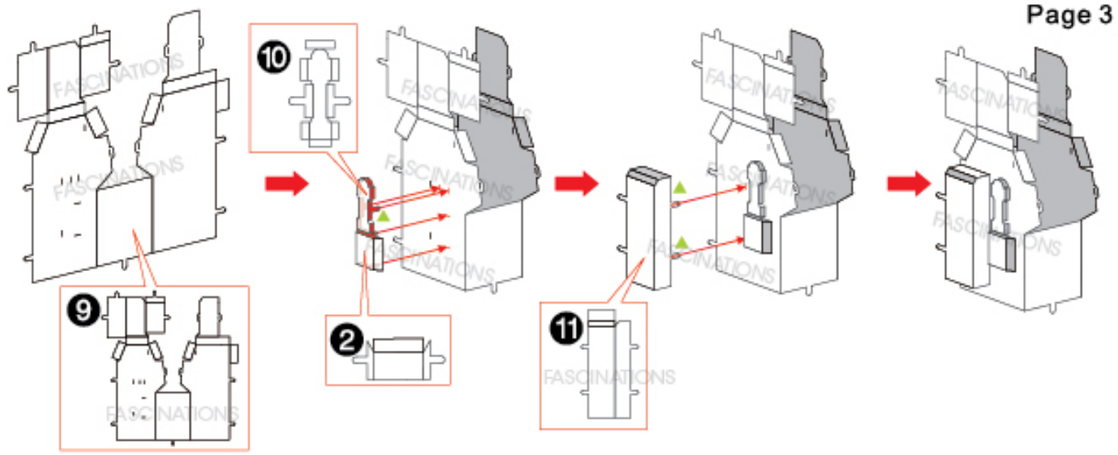
9
10
2
11

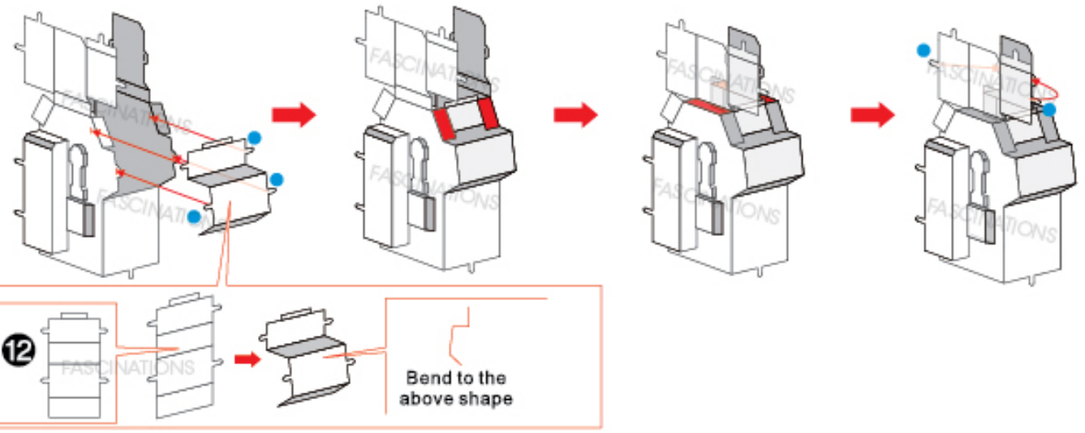
12
Bend to the above shape

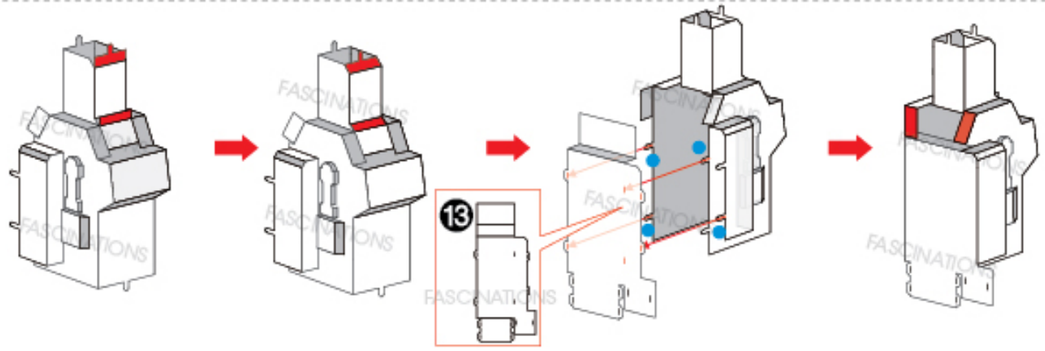
13

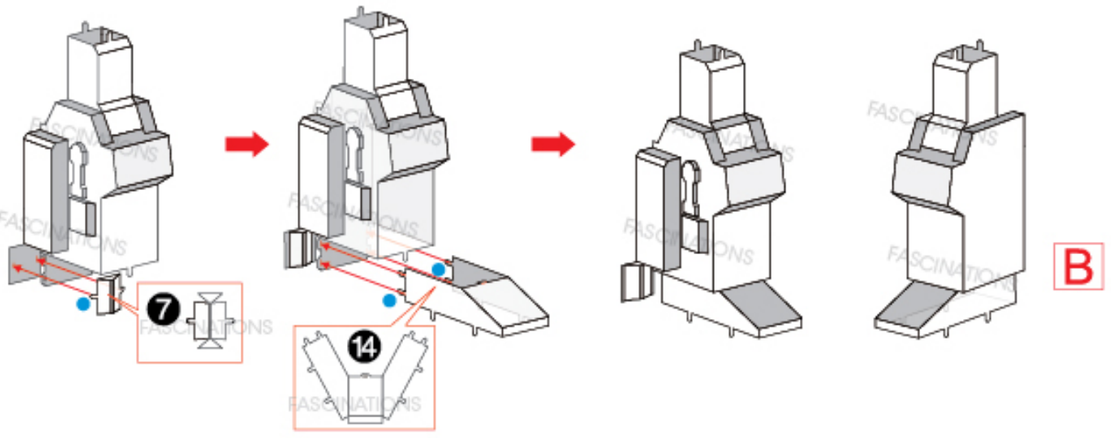
7
14
B

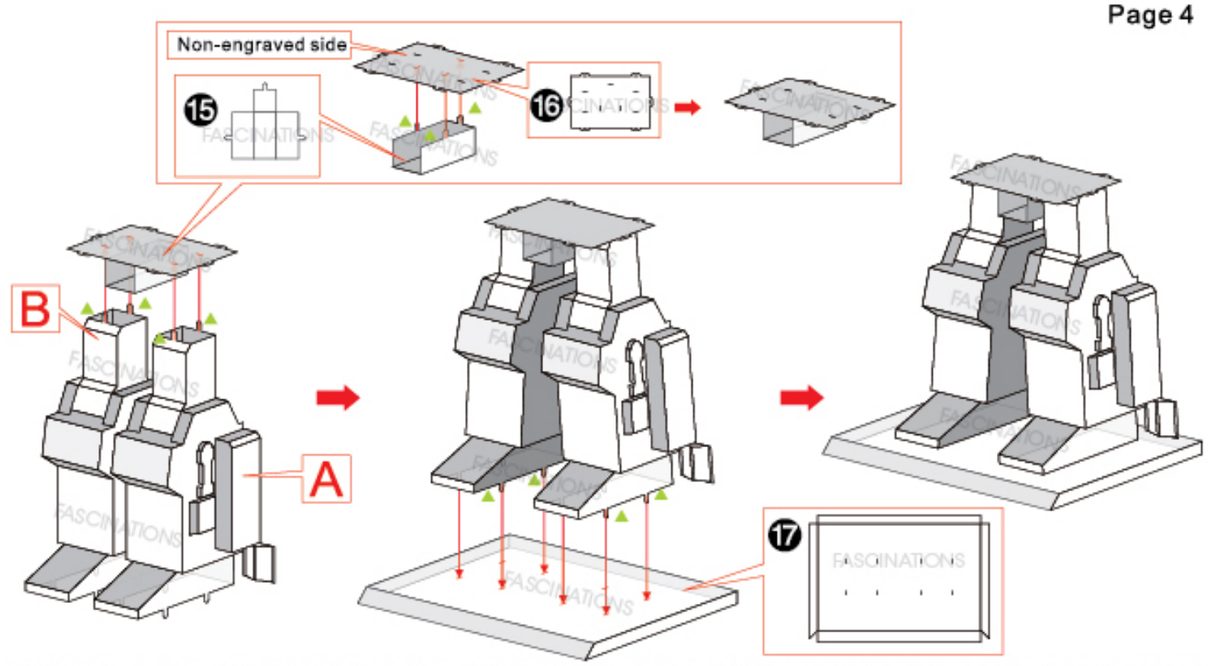
Non-engraved side
15
16
B
A
17

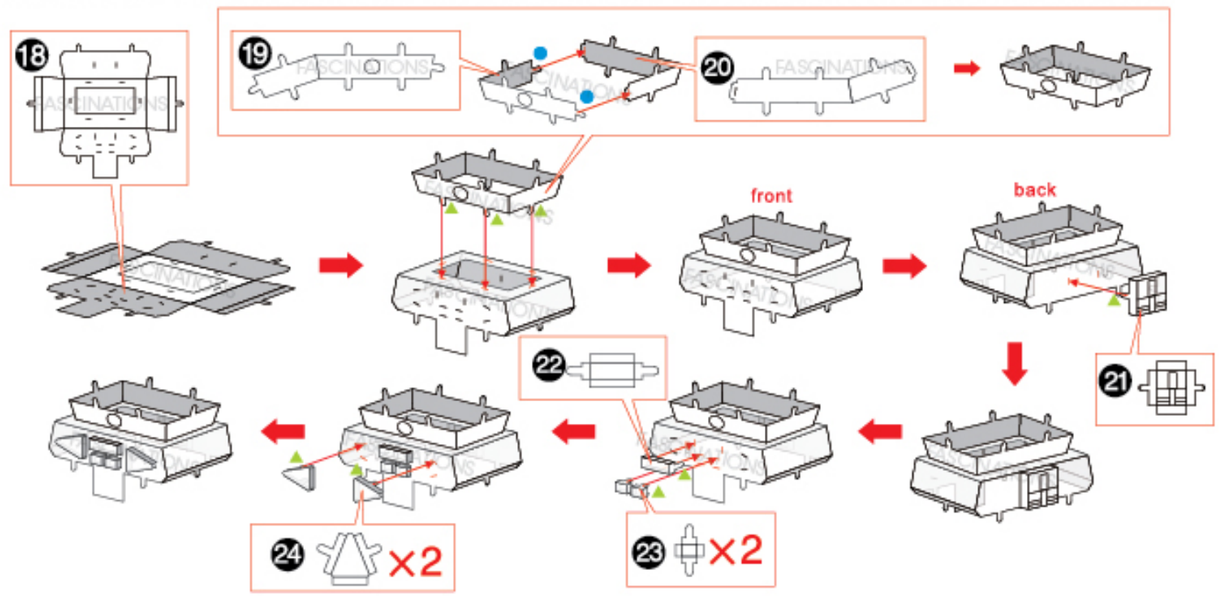
18
19
20
front
back
21
22
23 ×2
24 ×2

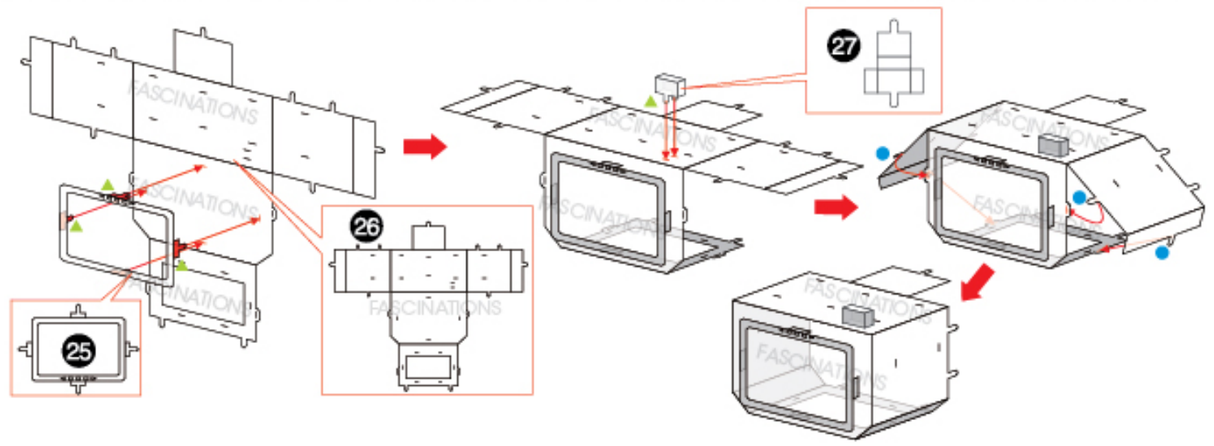
25
26
27

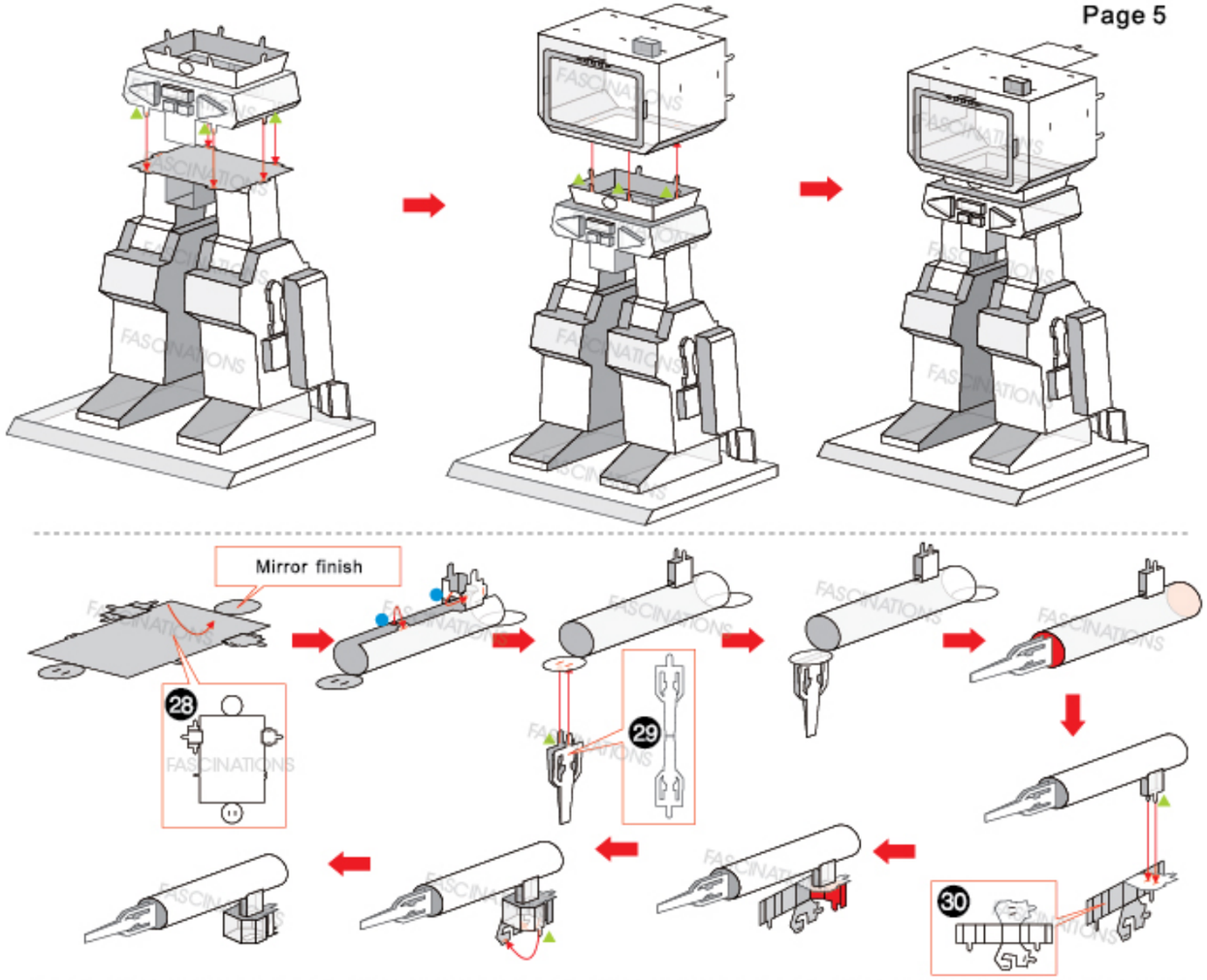

Mirror finish
28
29
30

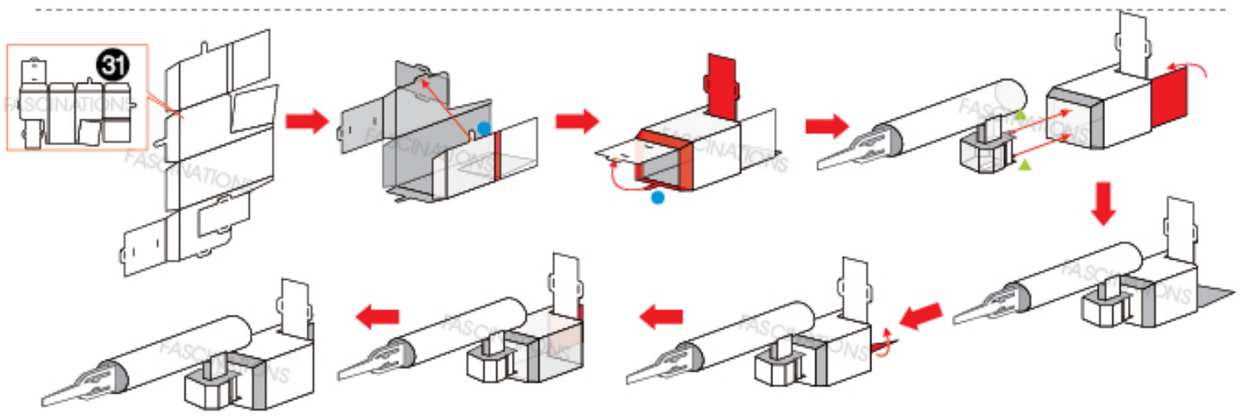
31

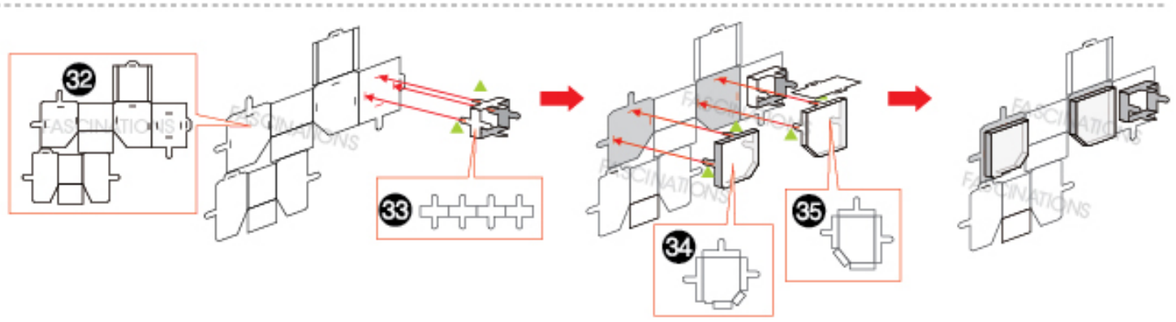
32
33
34
35

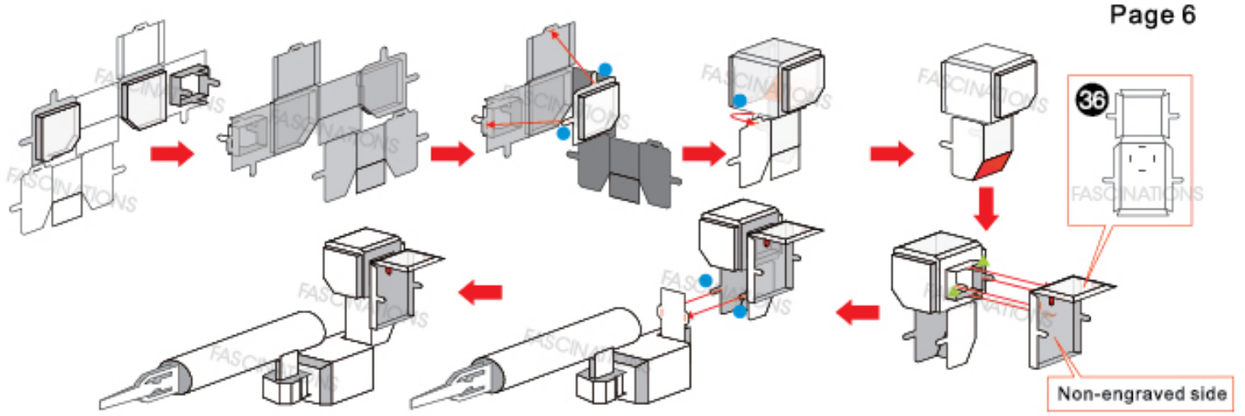
36
Non-engraved side

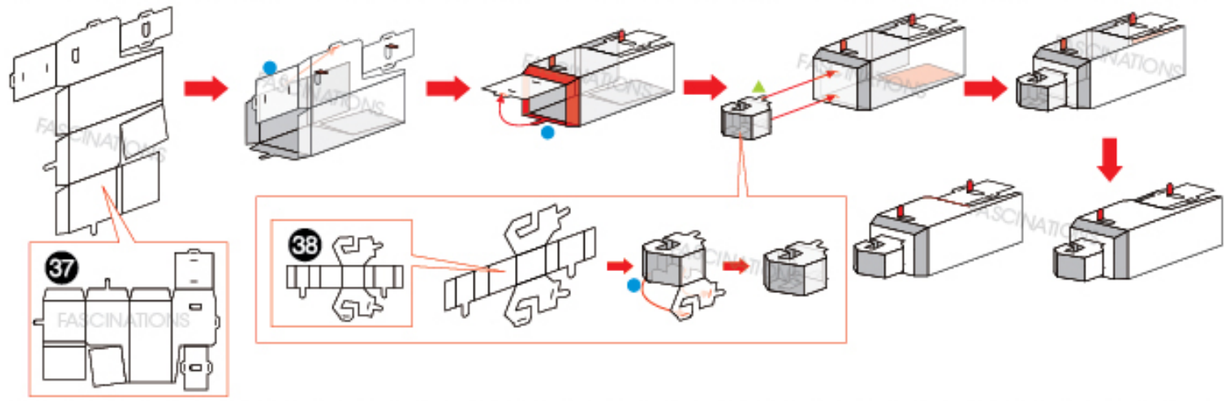
37
38

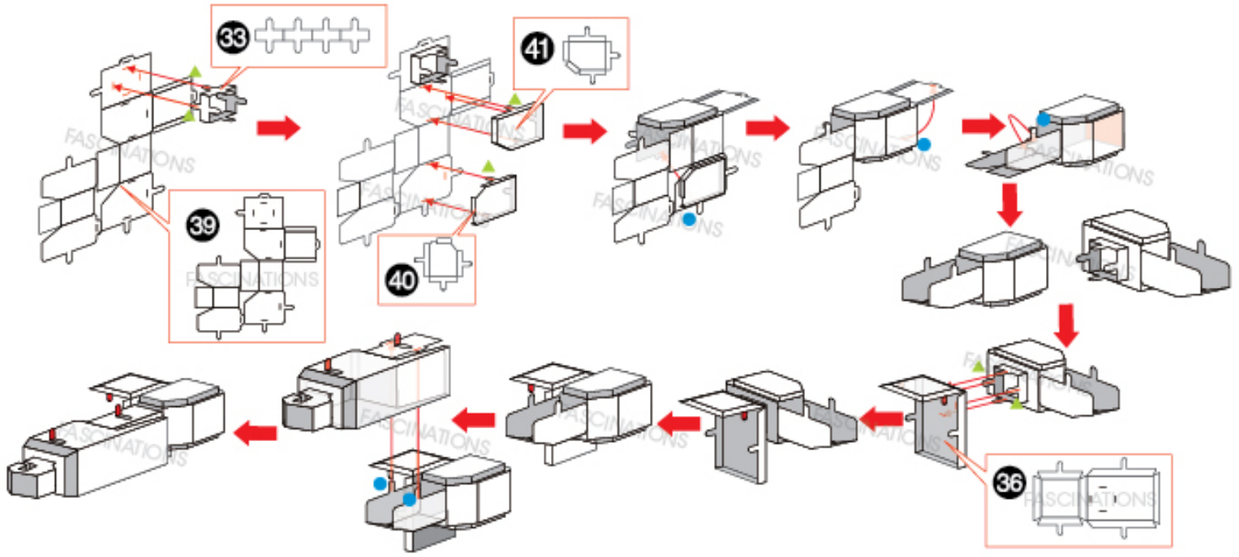
33
39
40
41
36

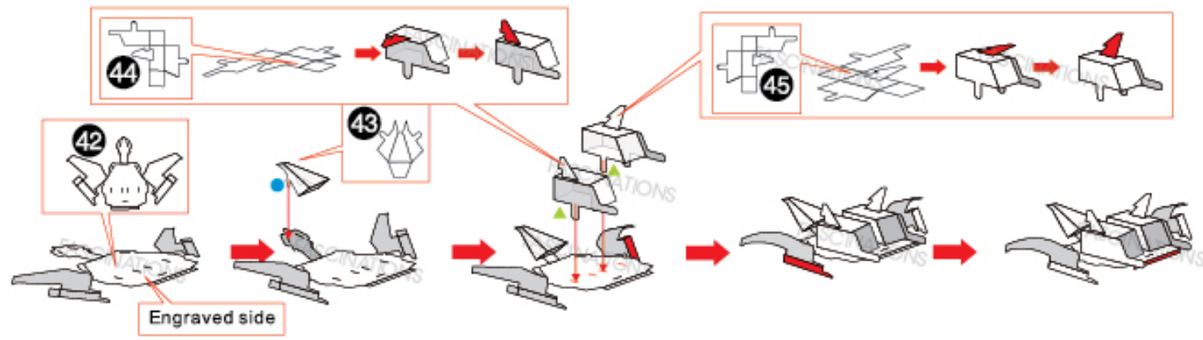
44
45
42
43
Engraved side

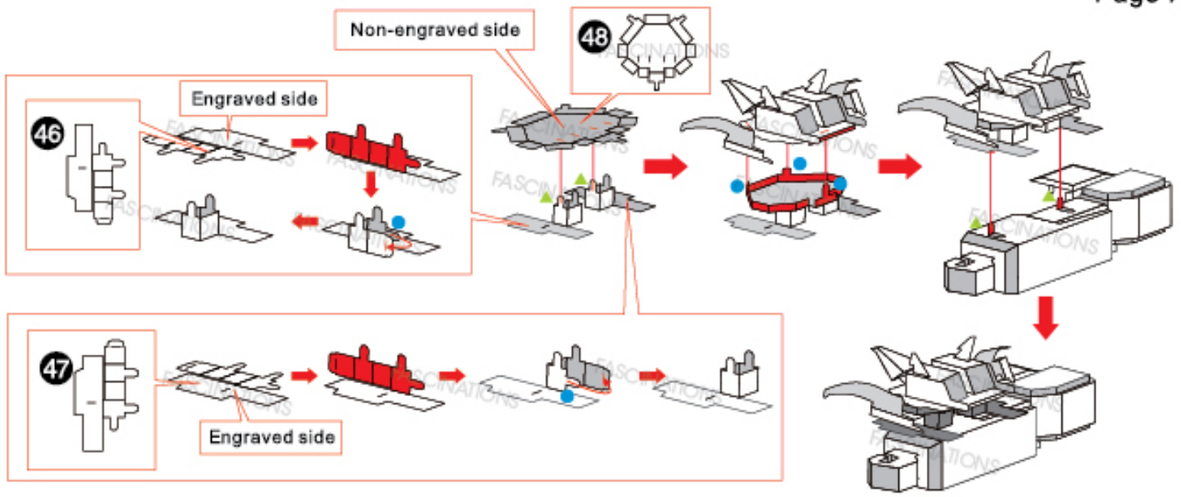

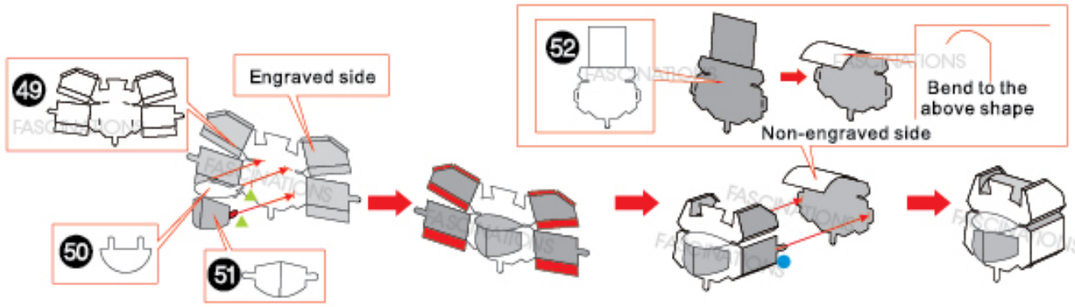

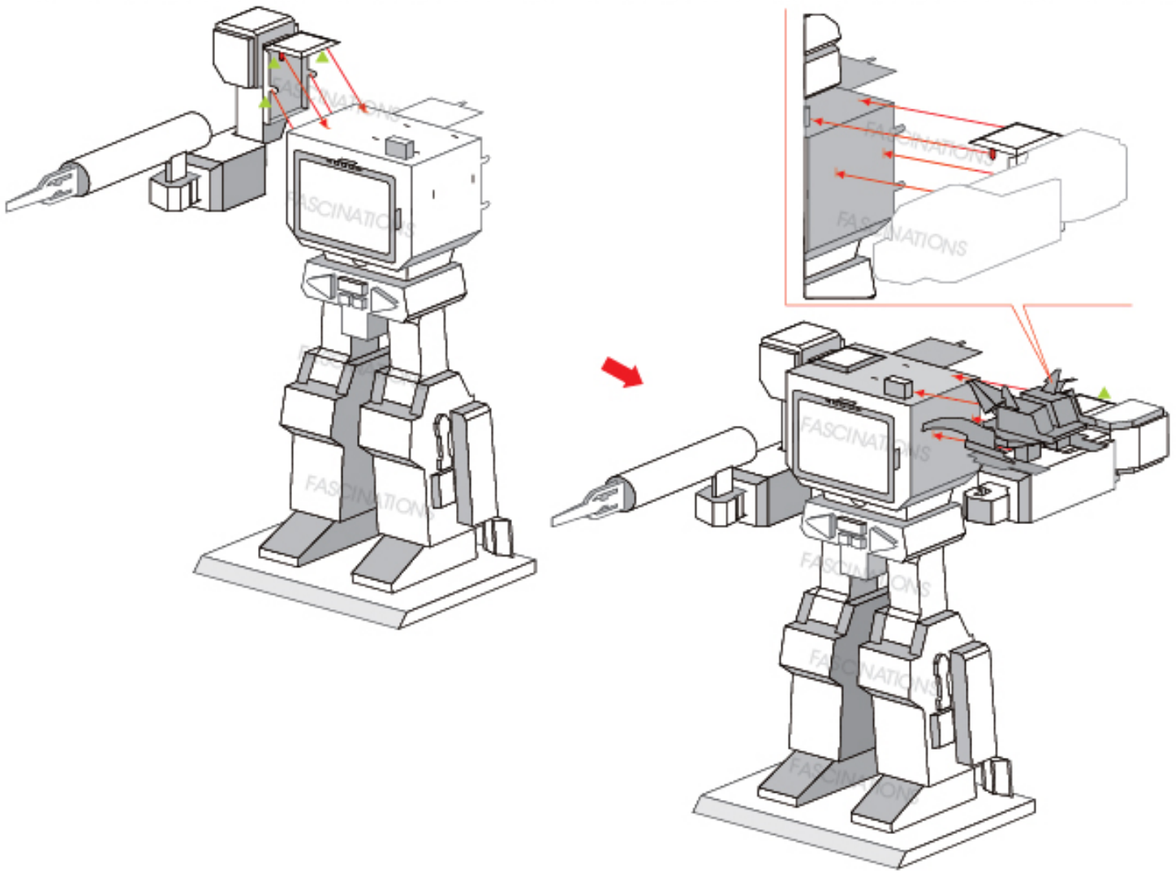

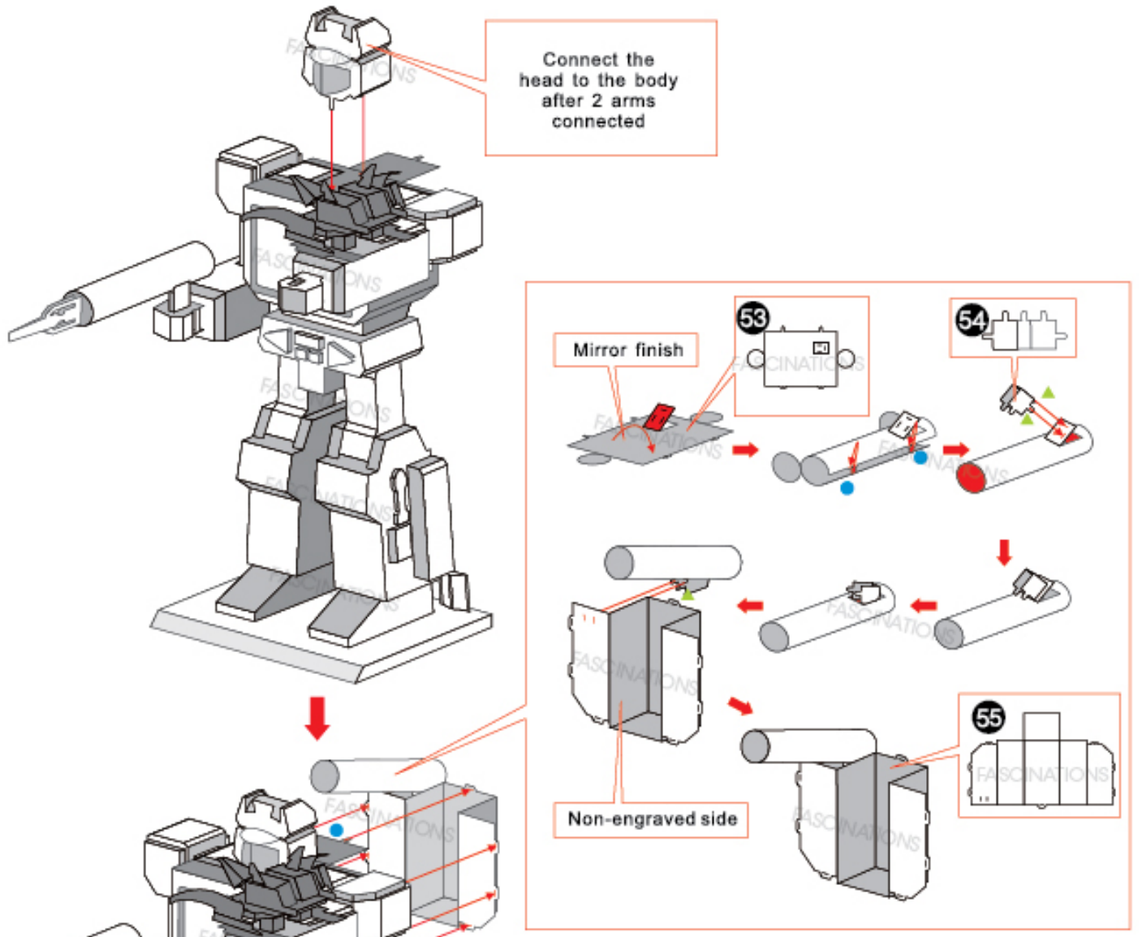

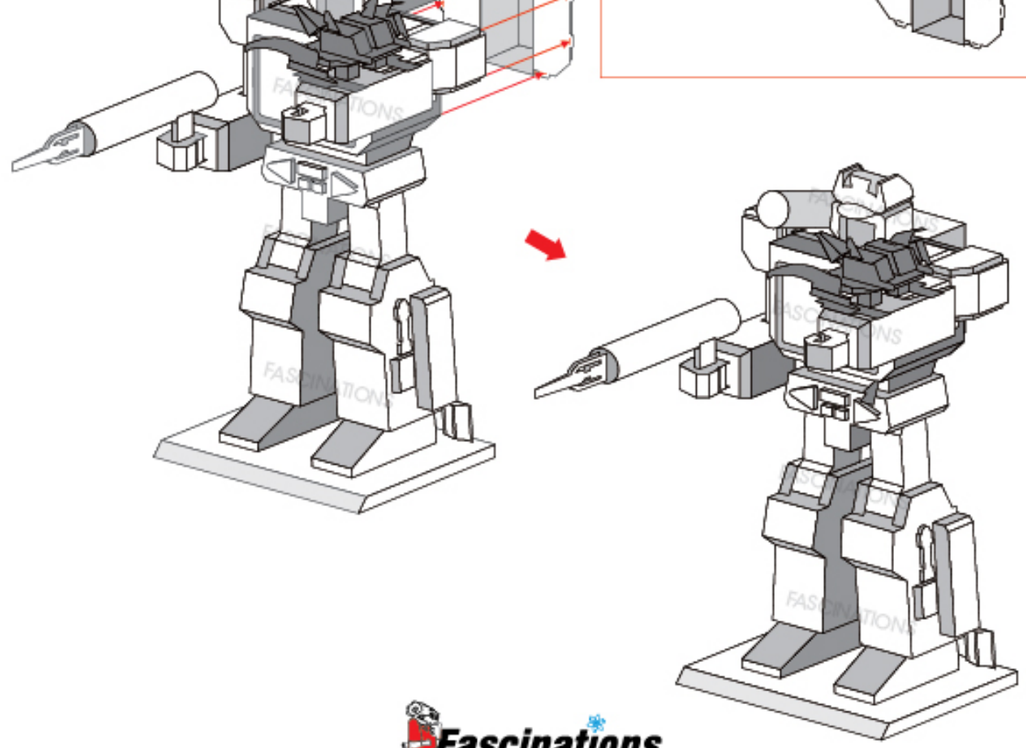

Fascinations
www.fascinations.com/metalearth