LEGENDS

It is highly recommended that you visit
www.metalearth.com/360/mem065
to see the completed model before assembling your own

Metal Earth
3D METAL MODEL KITS

METAL SHEETS

Parts that are in the same color are duplicates

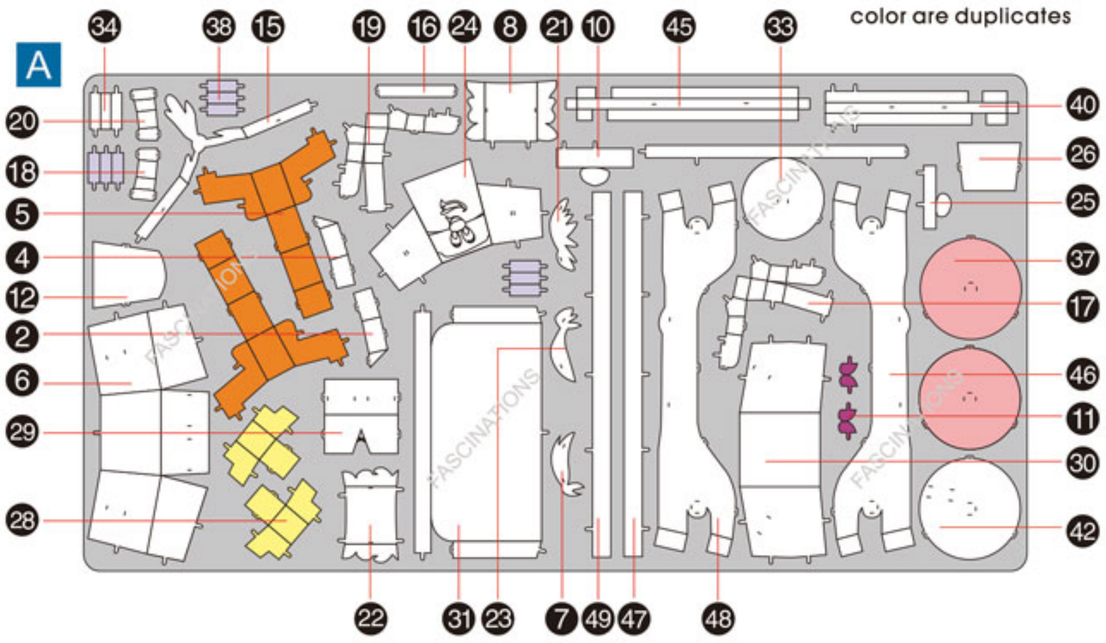

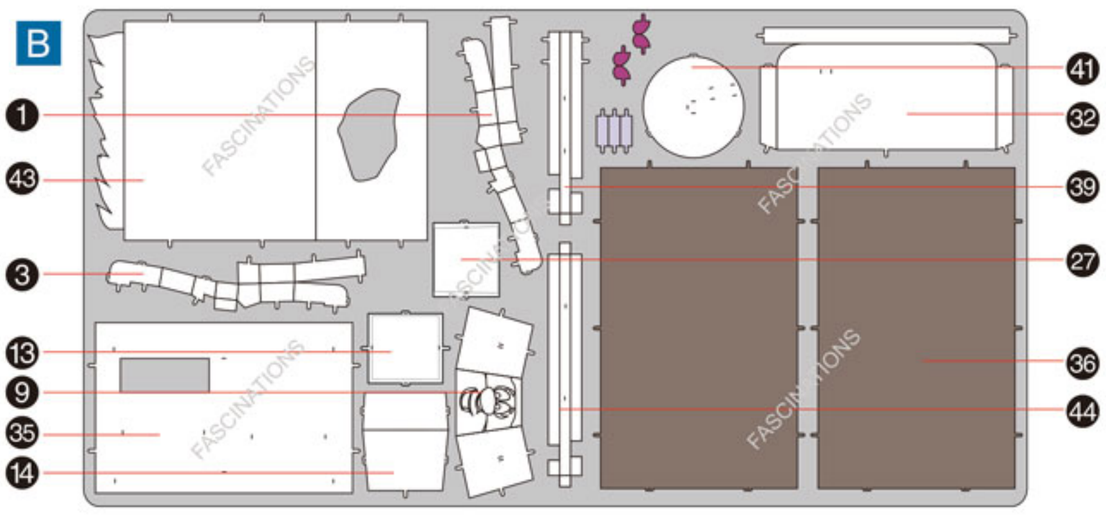

In order to avoid possible injury from sharp edges, please carefully discard the metal sheets after parts have been removed.

MEM065

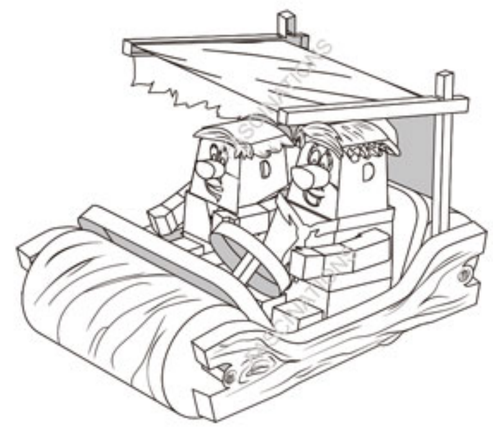

Flintstones

TO CREATE THE BEST CONNECTIONS

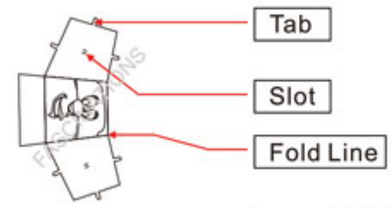

Legends:

- E — Engraved/Color side
- NE — Non-engraved/Silver side
- Attention point
- Insert tab and bend 90 degrees
- Insert tab and twist 90 degrees

Assembly tip:

If needed, slightly twist tabs to hold parts together then untwist and bend them down for a nice finish

Recommended tools:

-Wire cutters: helpful for taking parts from the metal sheets.

-Tweezers or needle nose pliers: helpful for folding parts, bending and twisting tabs.

ASSEMBLY STEPS

Step 1

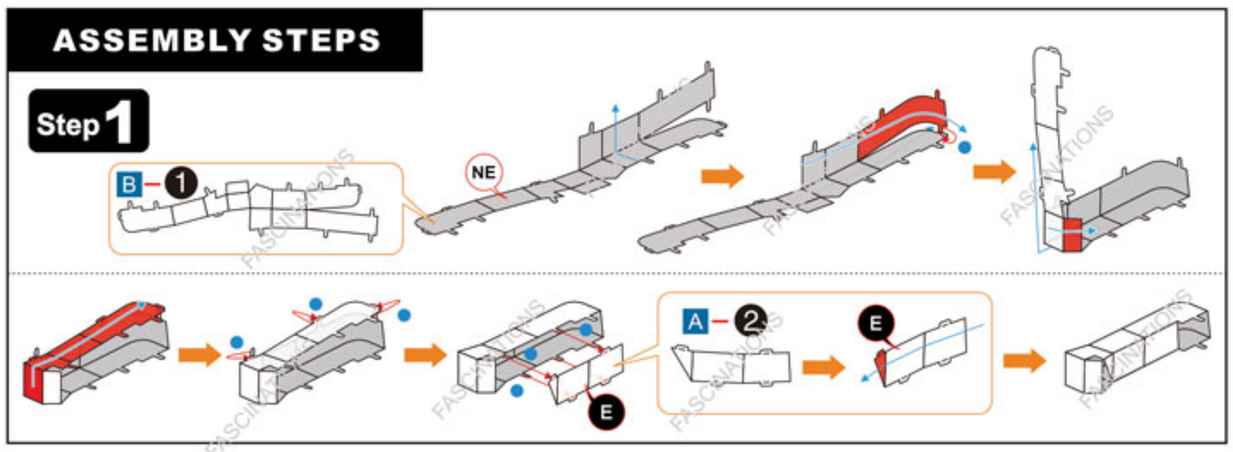

Step 2

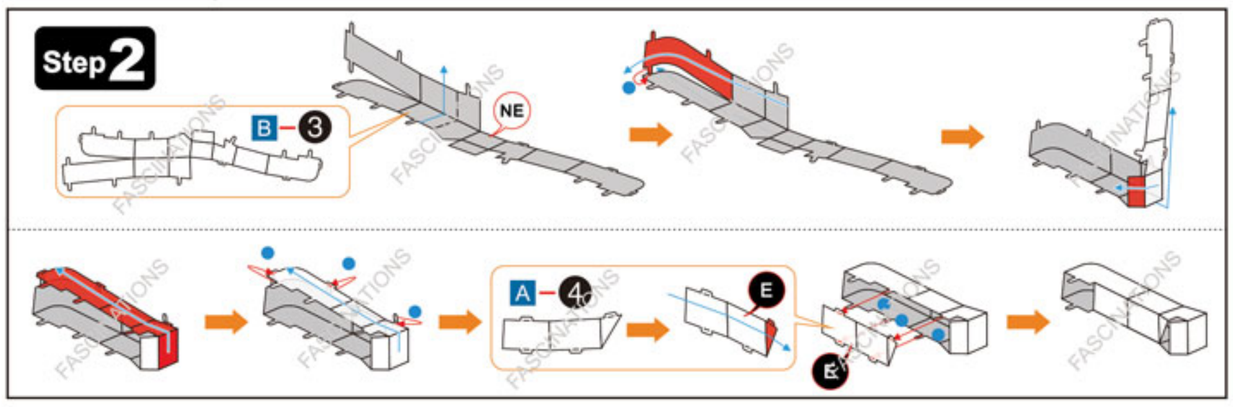

Step 3

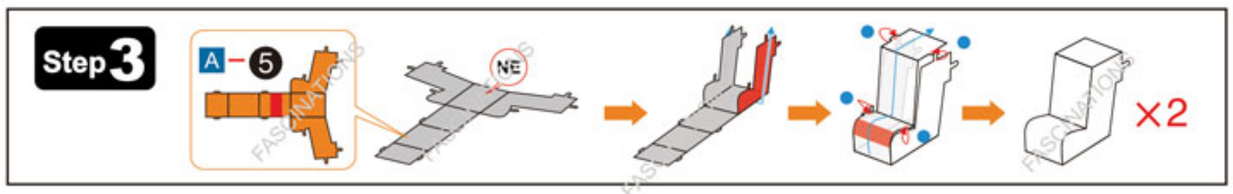

Step 4

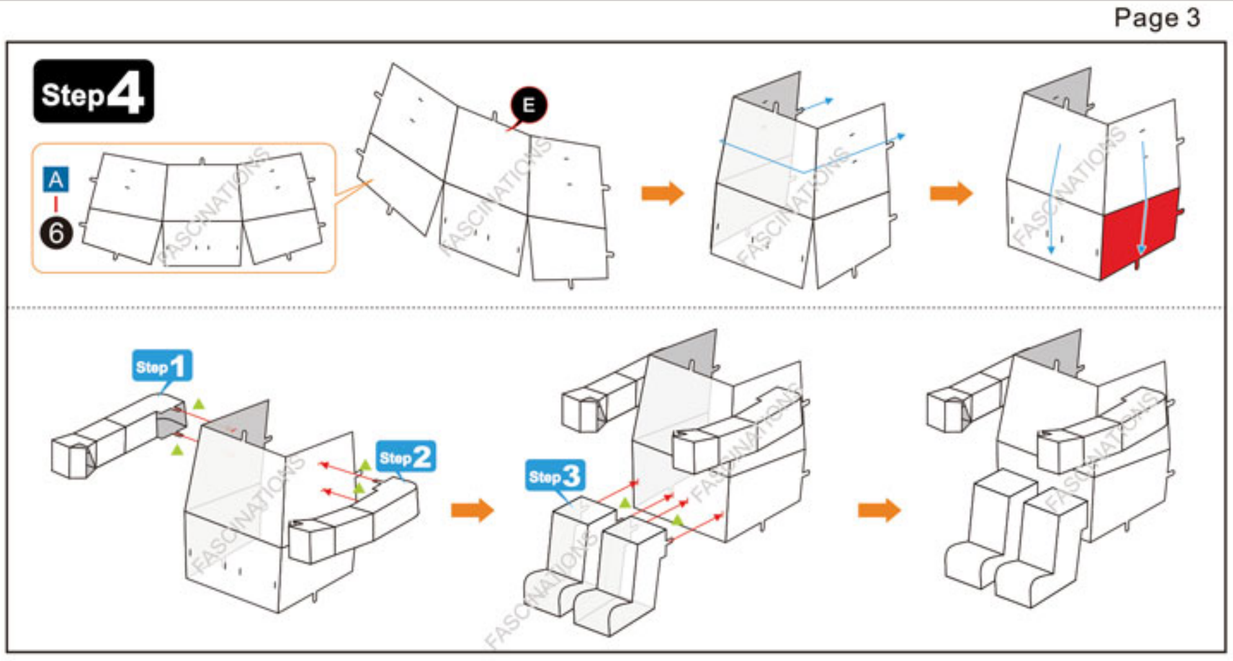

Step 5

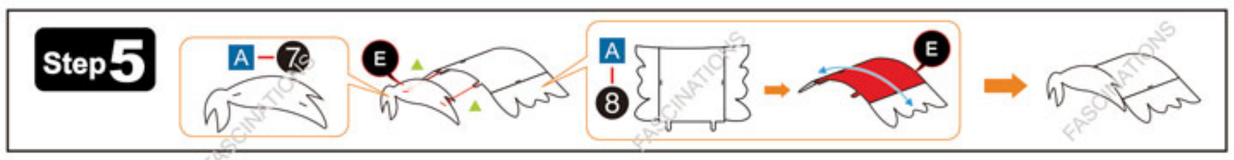

Step 6

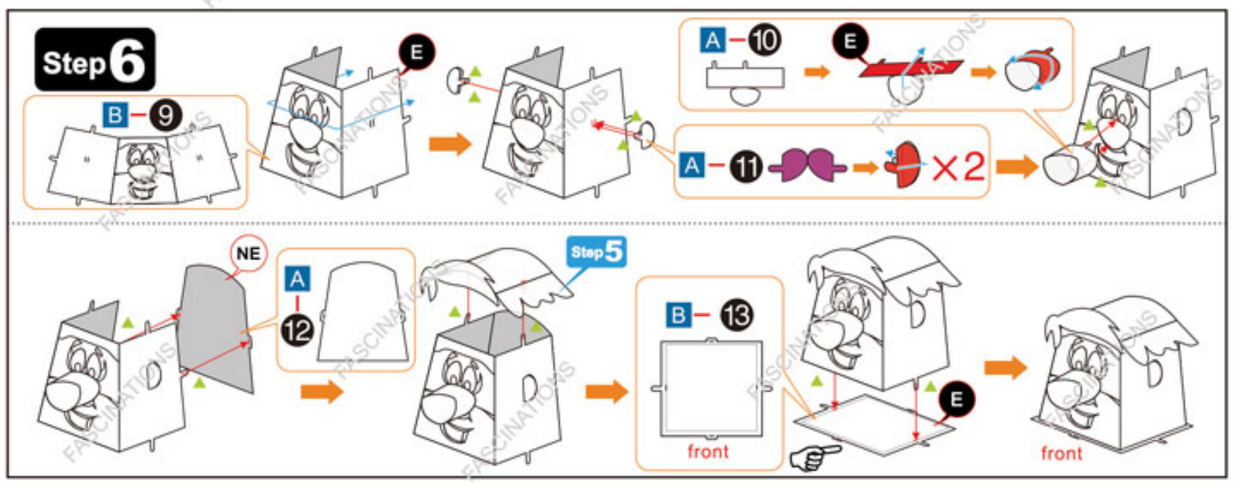

Step 7

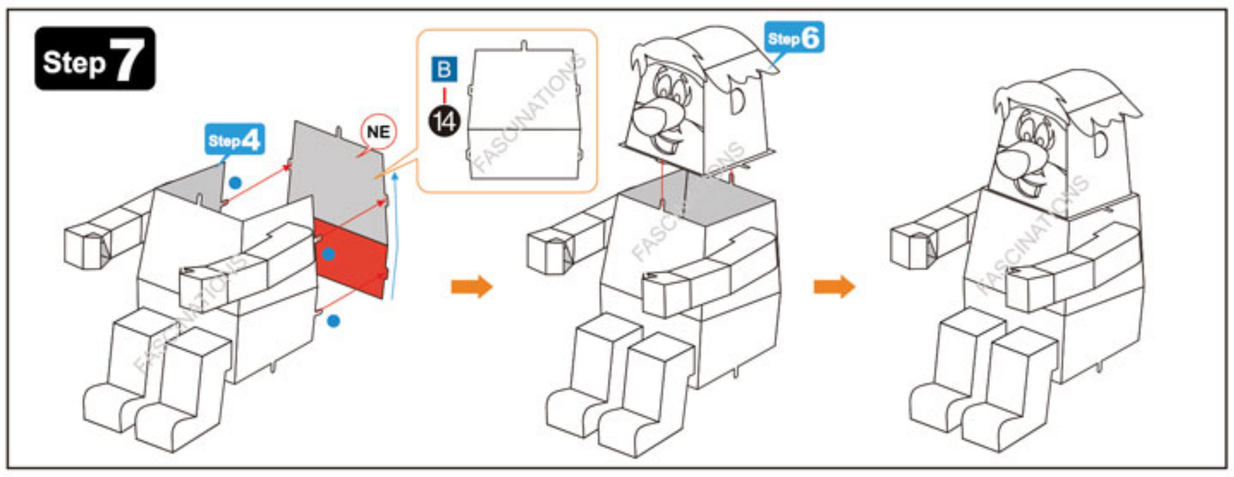

Step 8

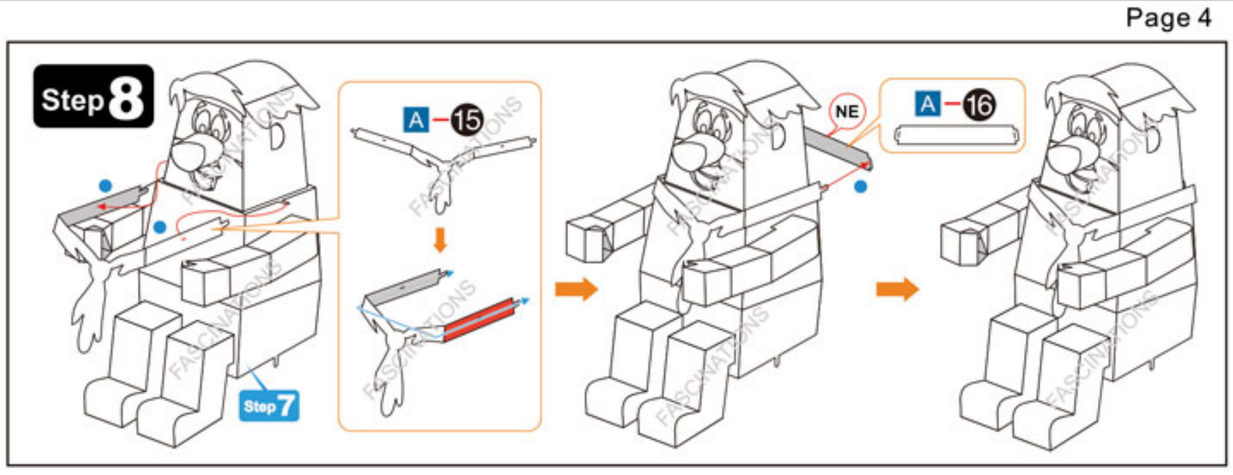

Step 9

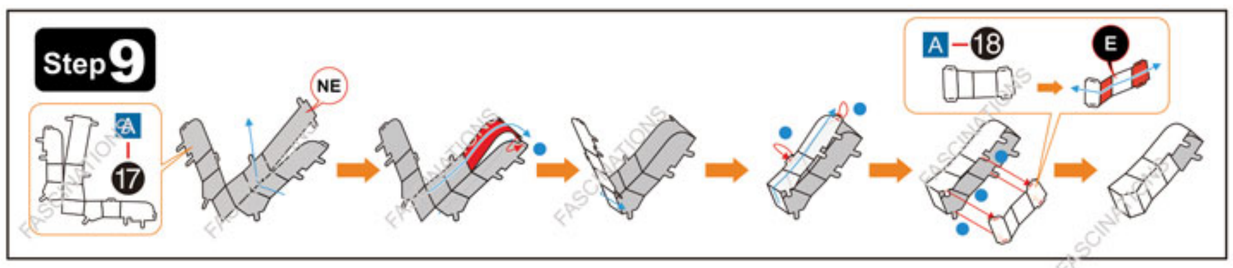

Step 10

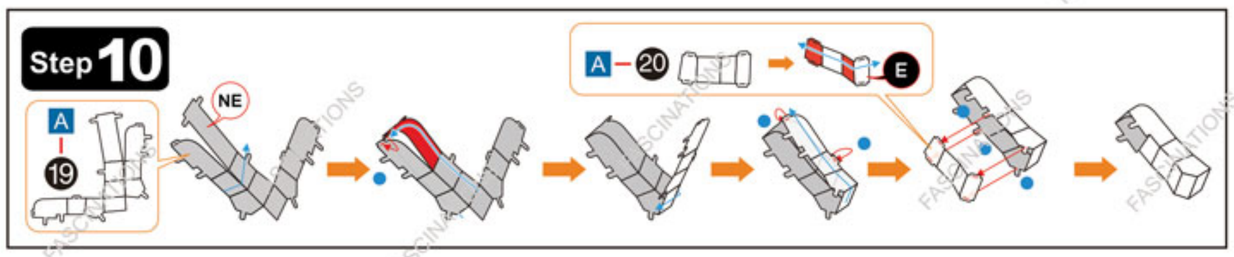

Step 11

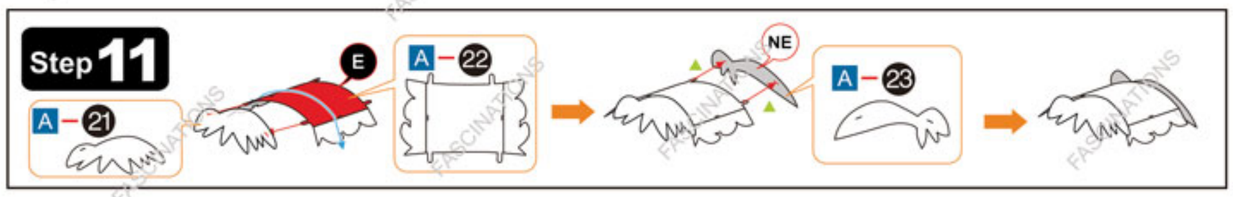

Step 12

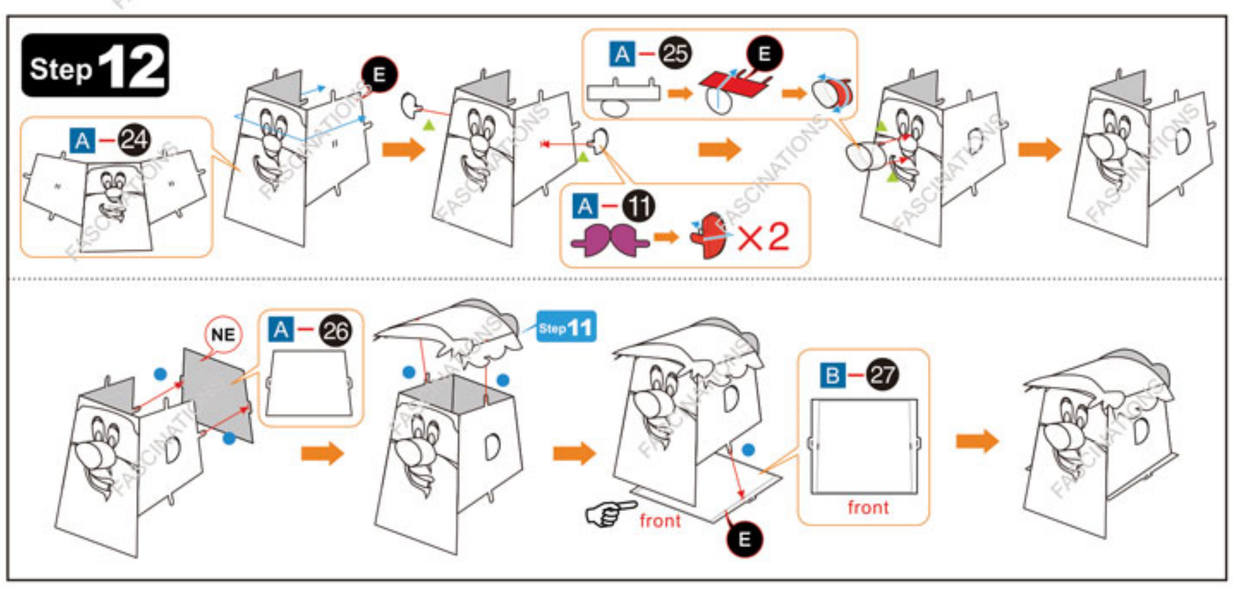

Step 13

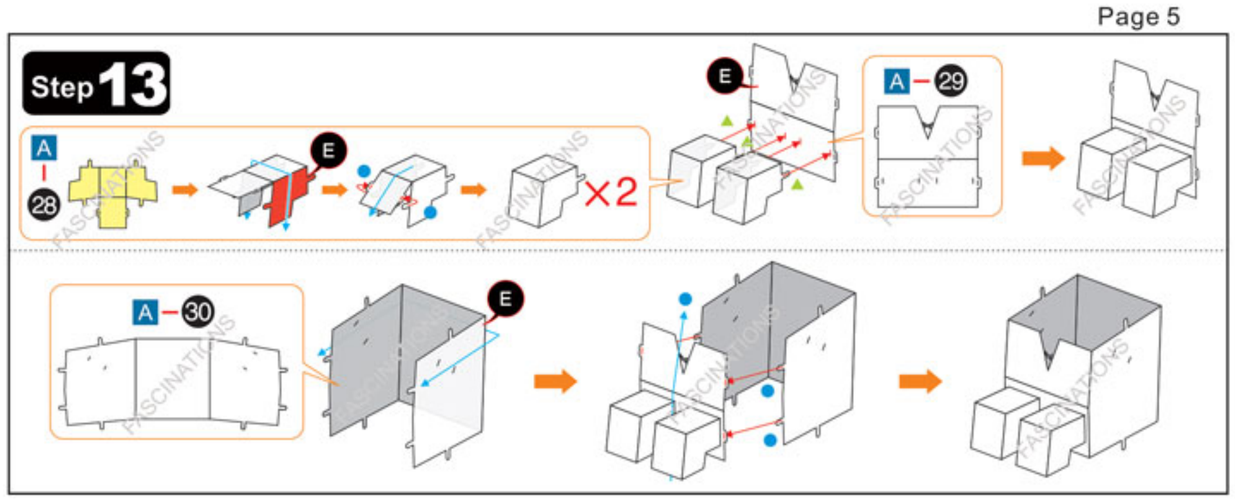

Step 14

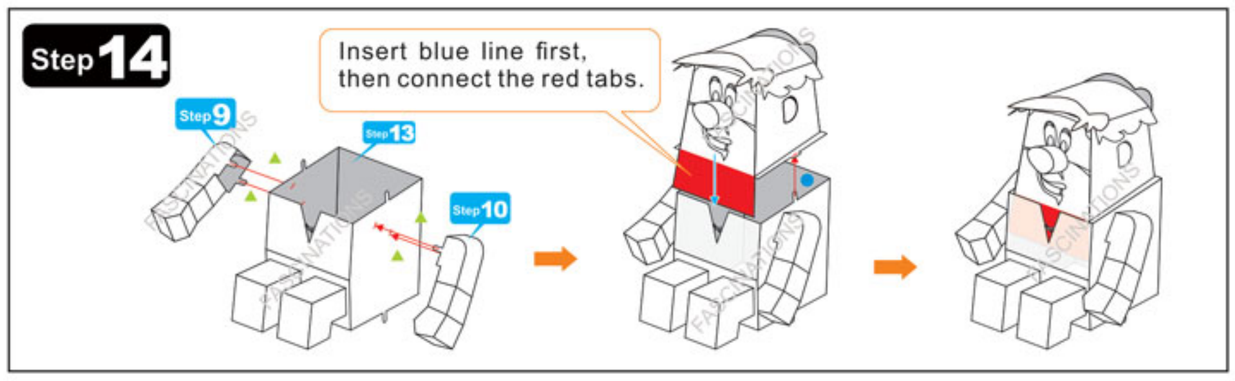

Step 15

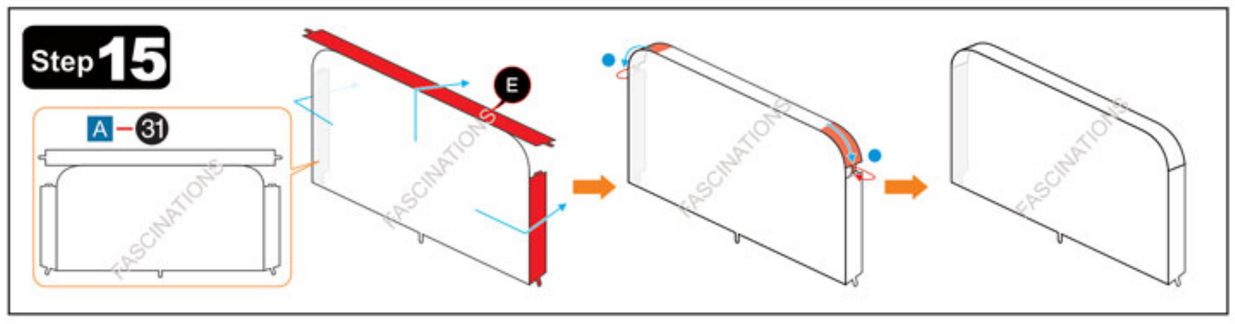

Step 16

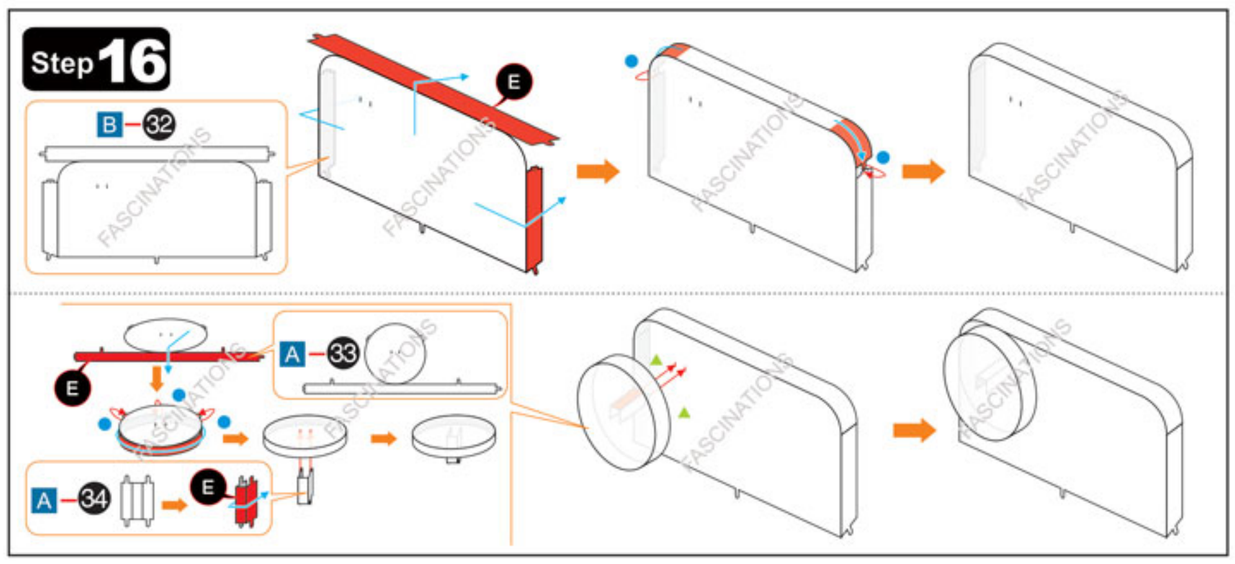

Step 17

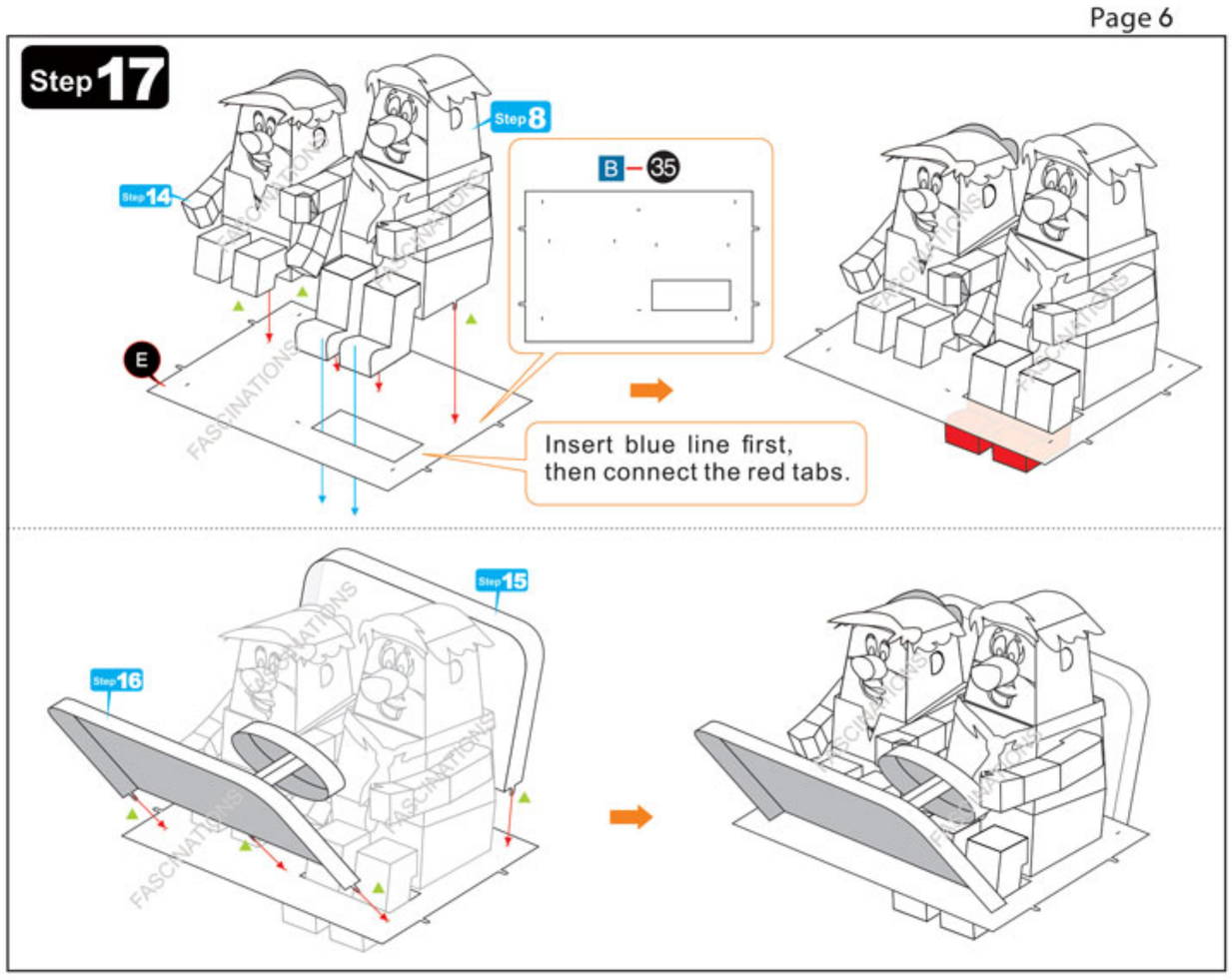

Step 18

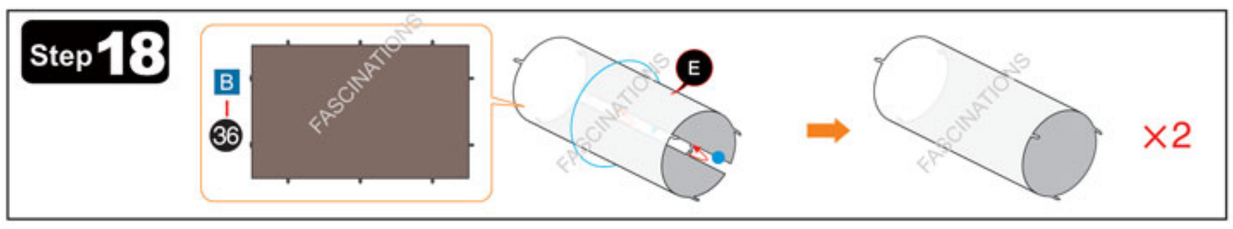

Step 19

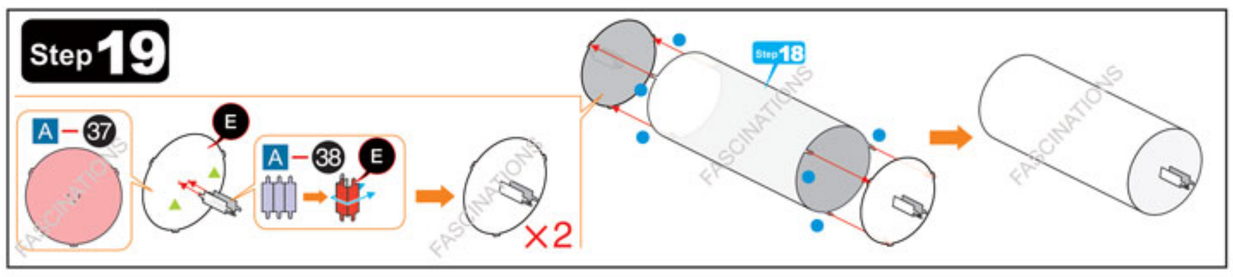

Step 20

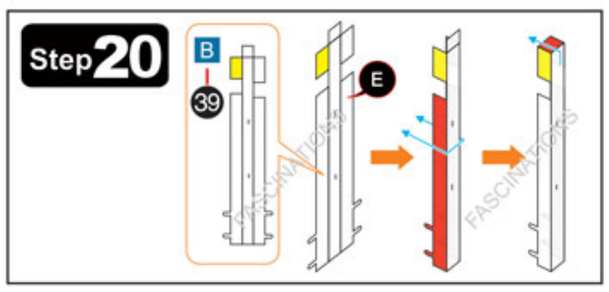

Step 21

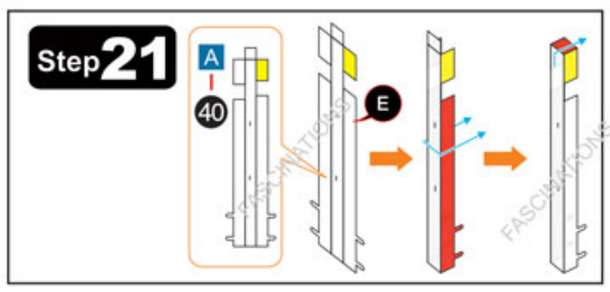

Step 22

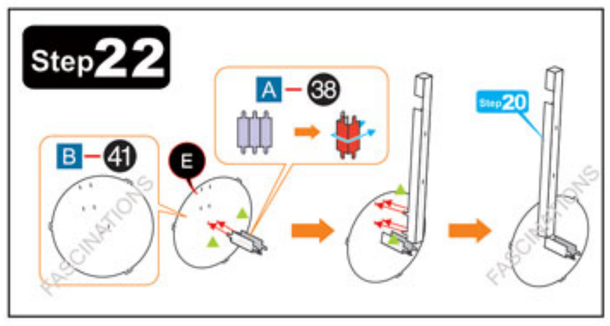

Step 23

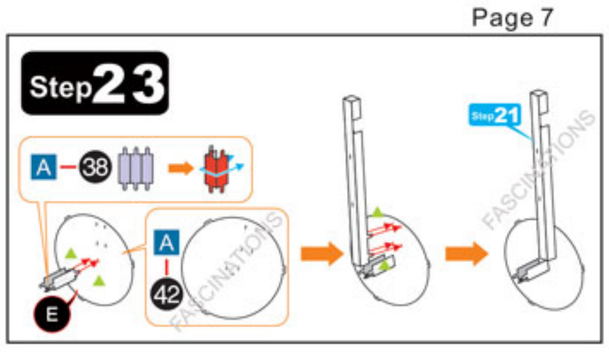

Step 24

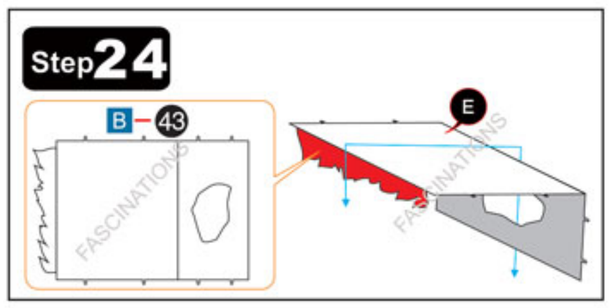

Step 25

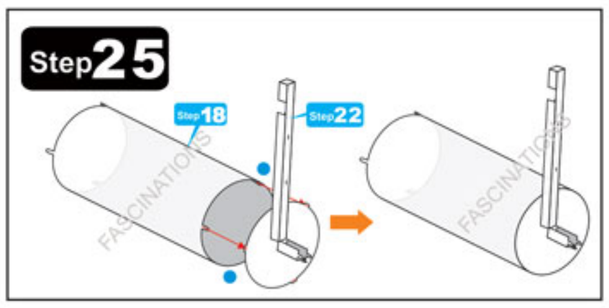

Step 26

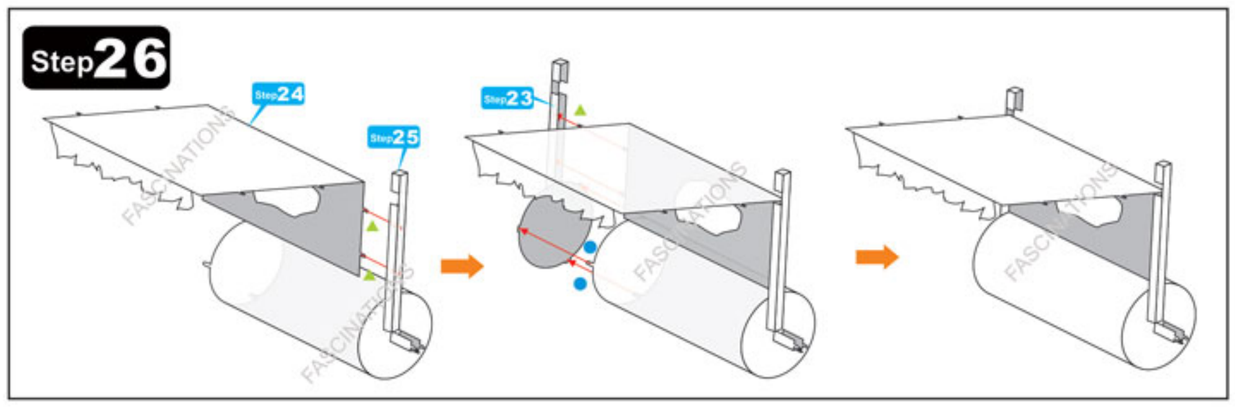

Step 27

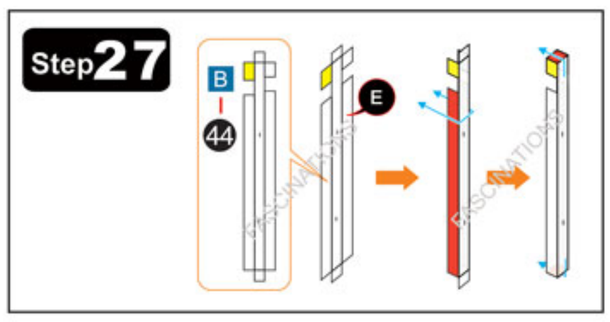

Step 28

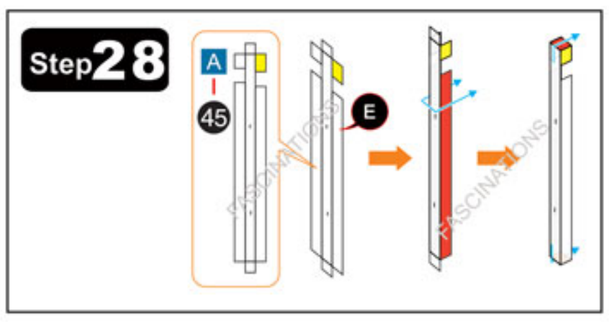

Step 29

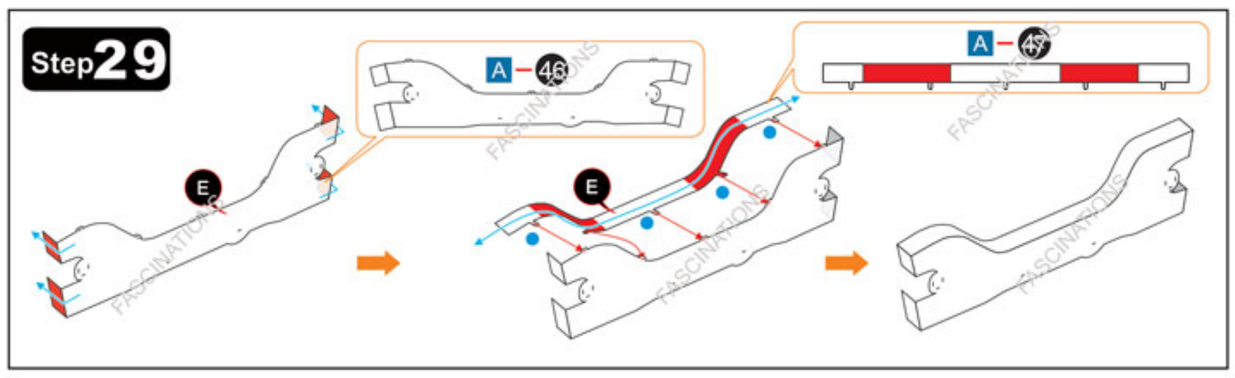

Step 30

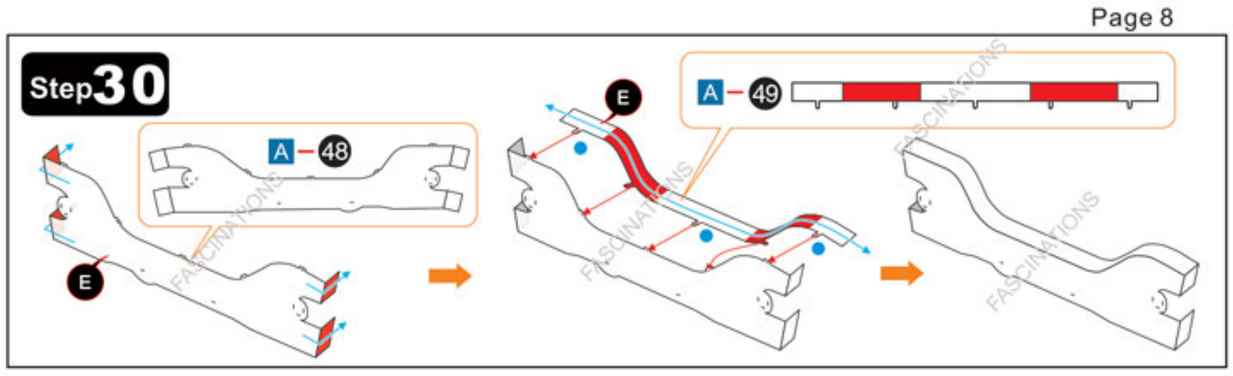

Step 31

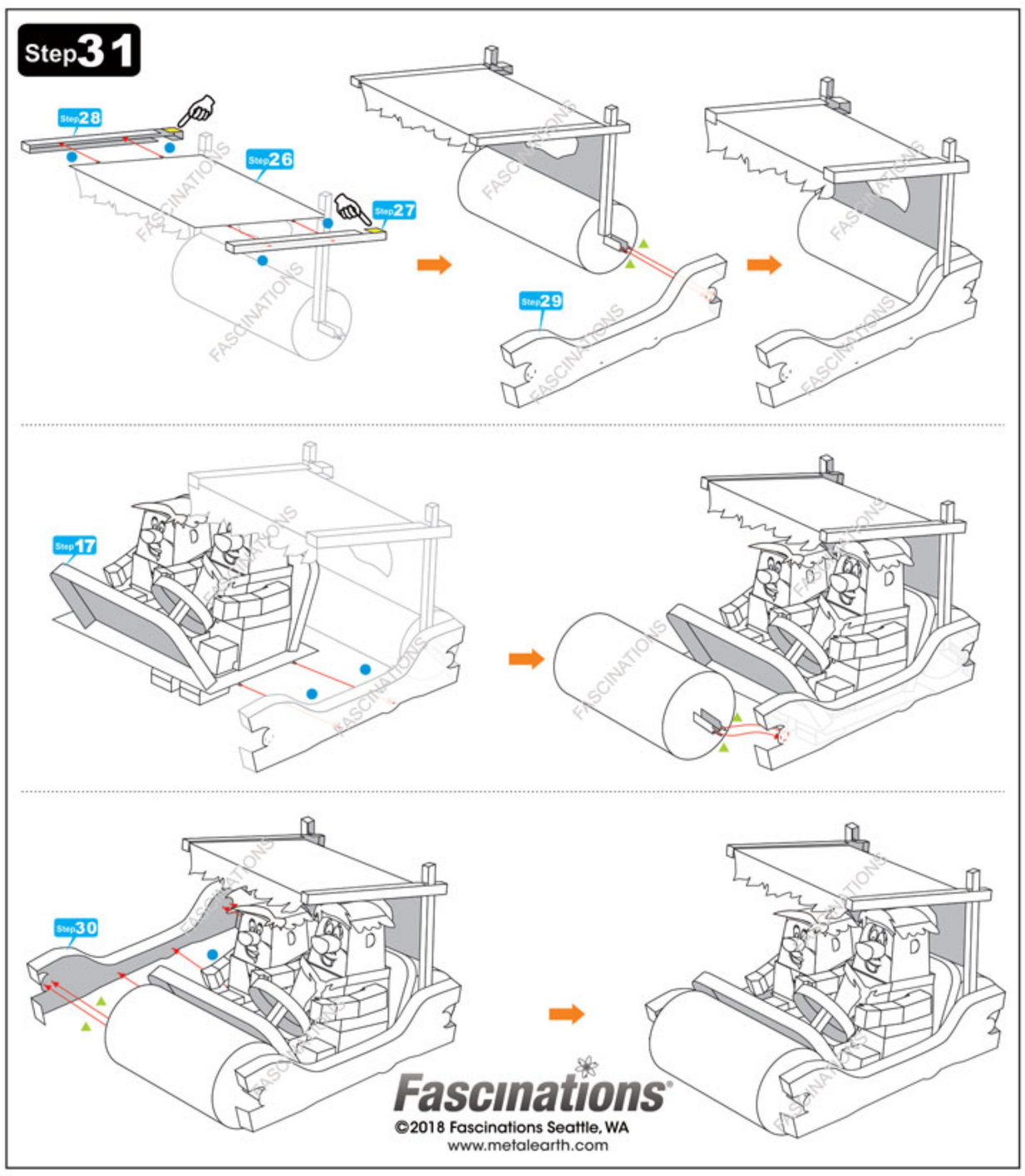

Fascinations®
©2018 Fascinations Seattle, WA
www.metalearth.com