METAL EARTH®
3D METAL MODEL KITS

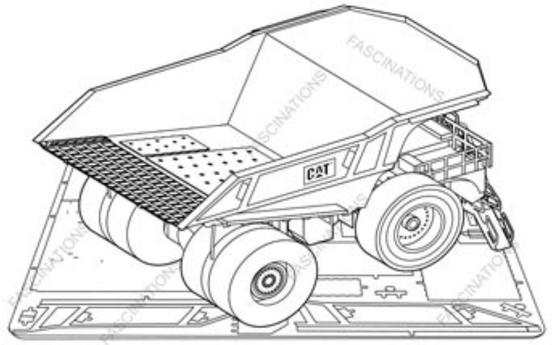

MINING TRUCK
Item number: MMS424

360° view

It is highly recommended that you visit
www.fascinations.com/metalearth360/mms424
to see the completed model before assembling your own

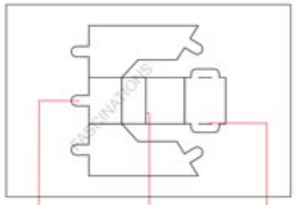

Insertion tabs are inserted and then folded

Fold lines can be seen as shown here

Insertion holes

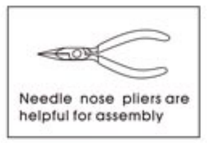

Needle nose pliers are helpful for assembly

Legends:

- E — Engraved side
- NE — Non-engraved side
- Attention point

To create the best connections

- Insert tab and bend 90 degrees for most visible areas
- Insert tab and twist 90 degrees is best in some areas to ensure a tight connection

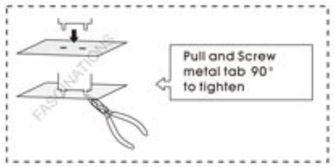

Metal sheets

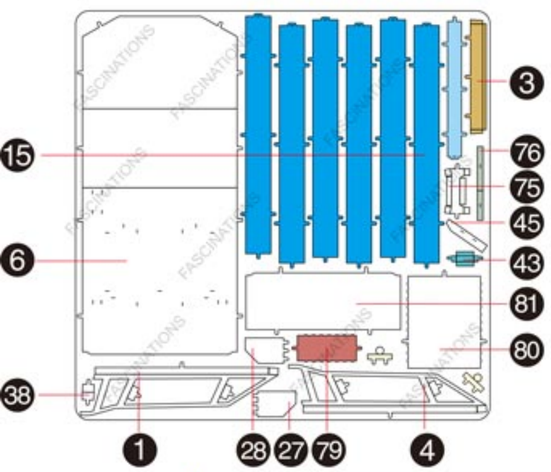

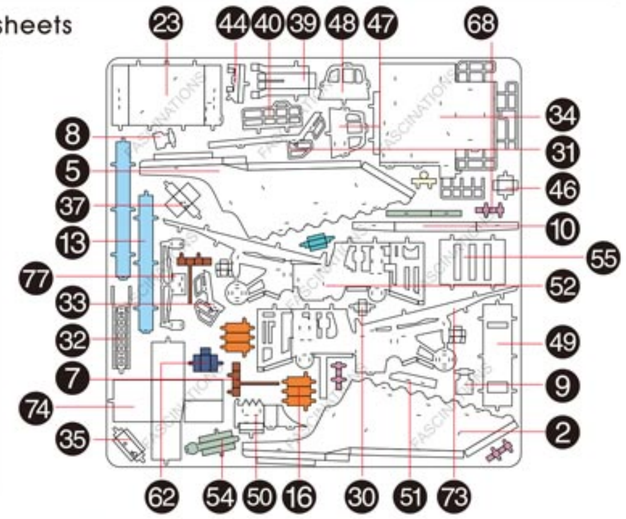

⚠ In order to avoid possible injury from sharp edges, please carefully discard the metal sheet after parts have been removed

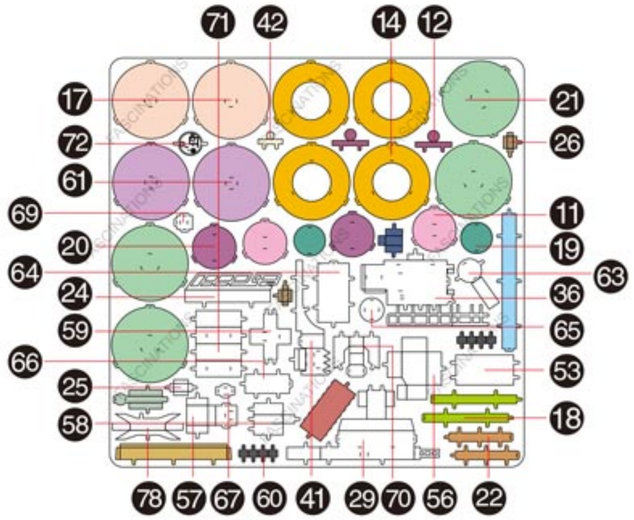

Assembly Flow Chart

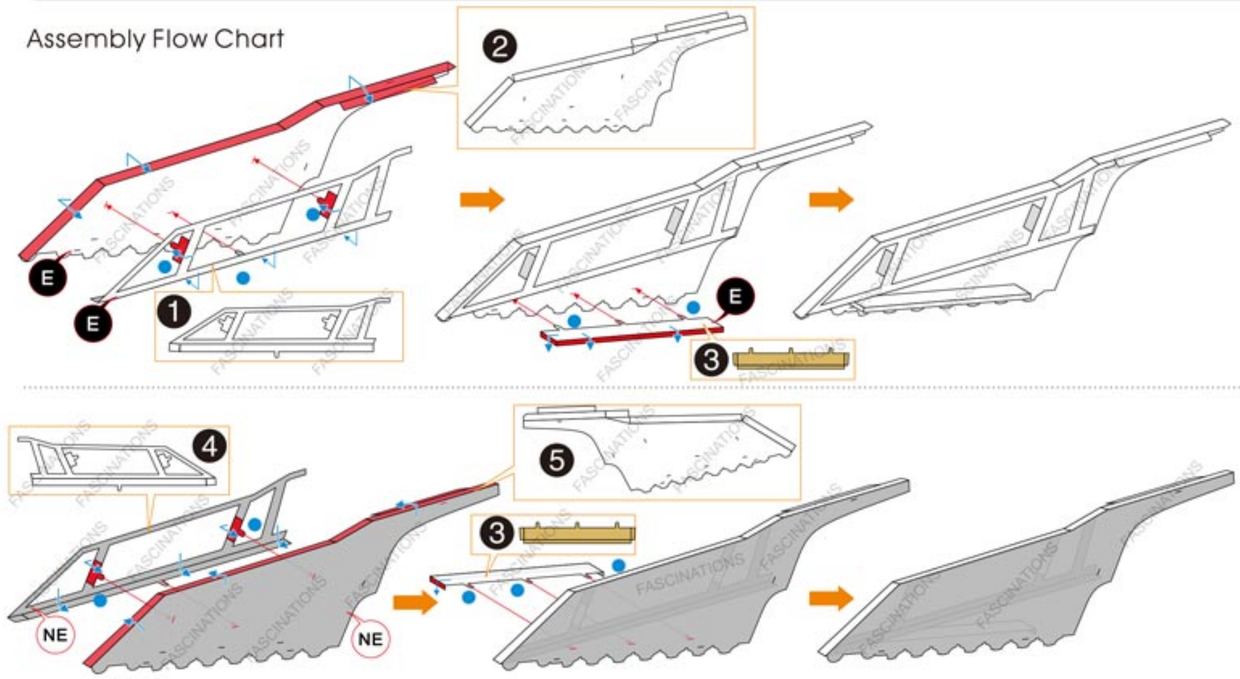

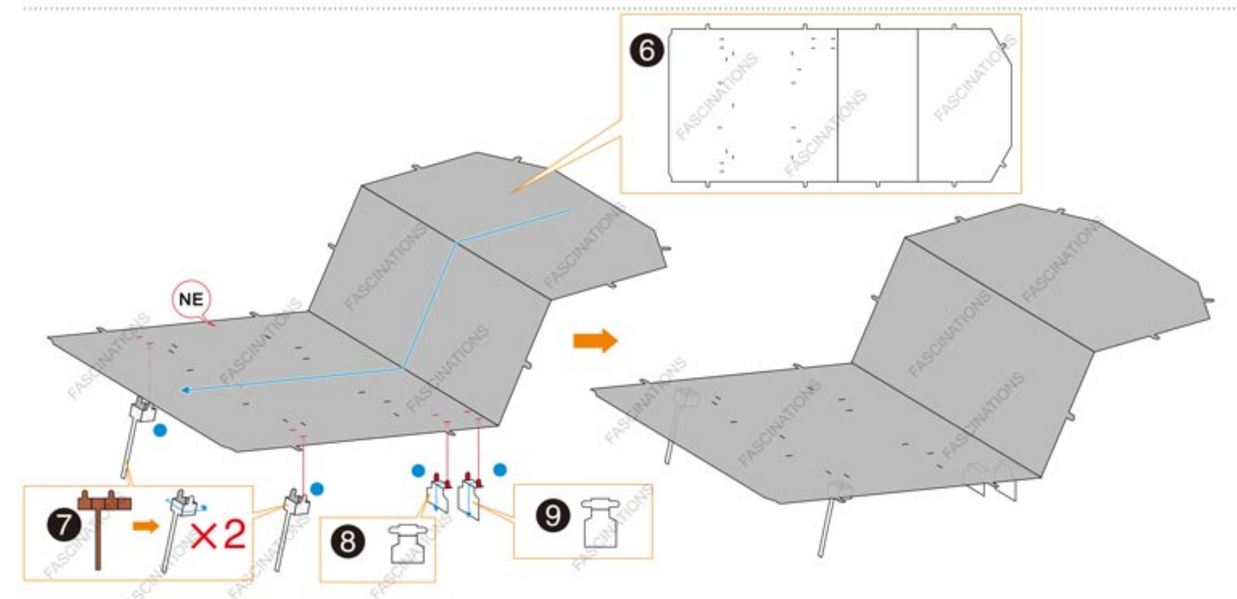

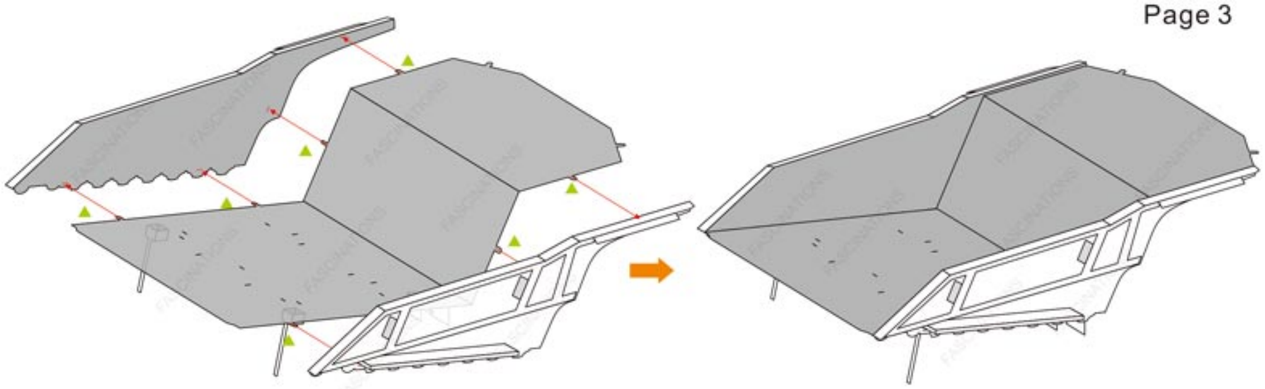

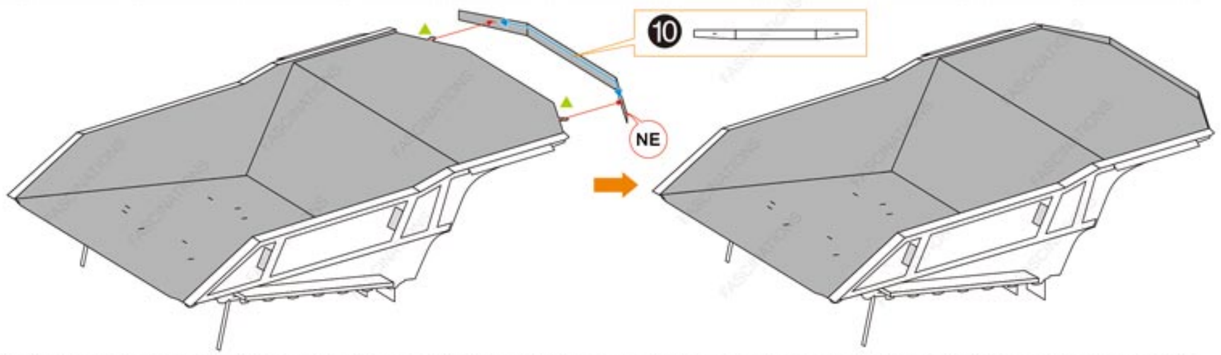
10
NE

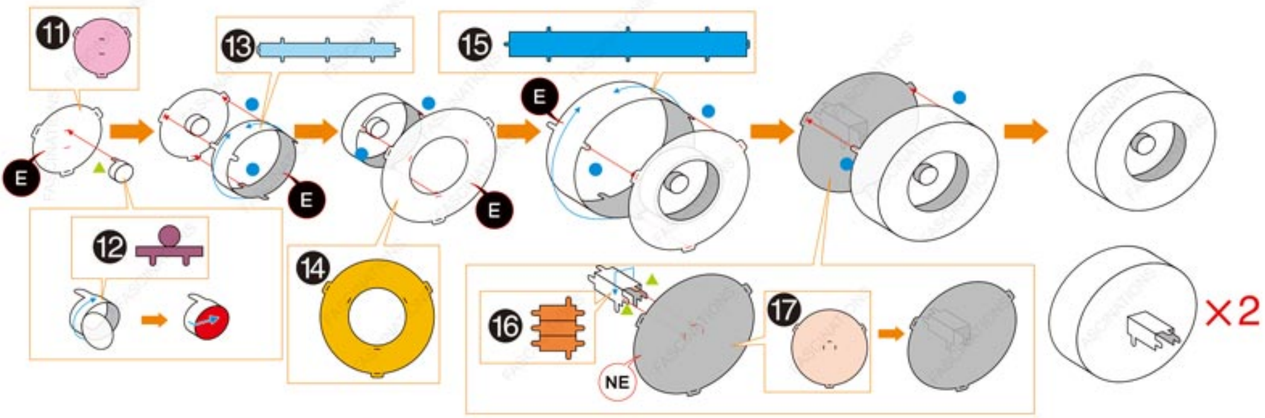
11
13
15
E
E
E
E
12
14
16
17
NE
×2

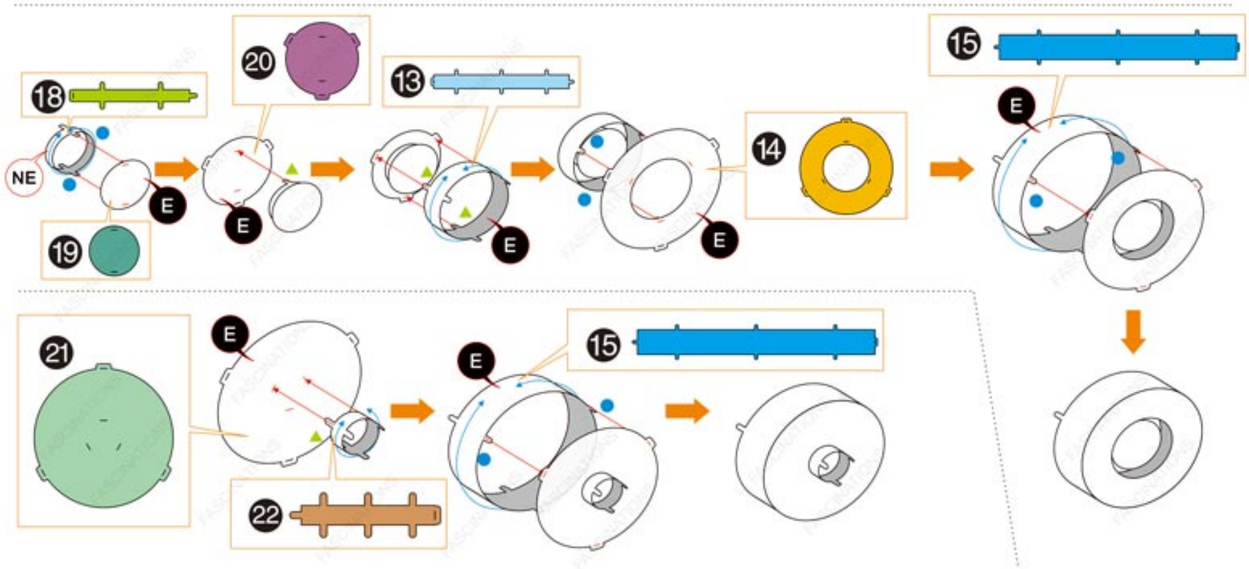
18
20
13
15
NE
E
E
E
E
E
14
19
21
E
E
15
22

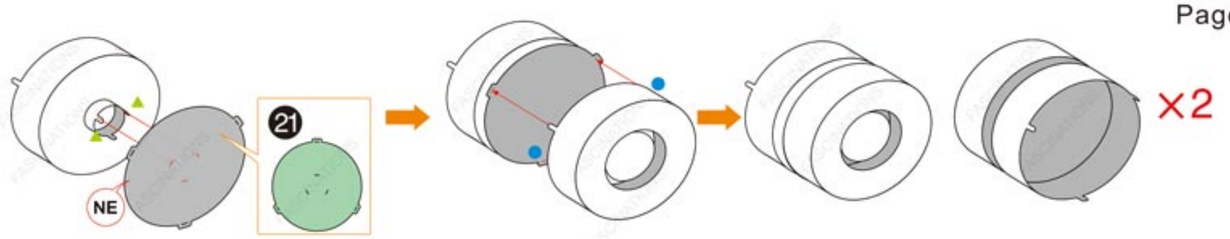
21
NE
×2

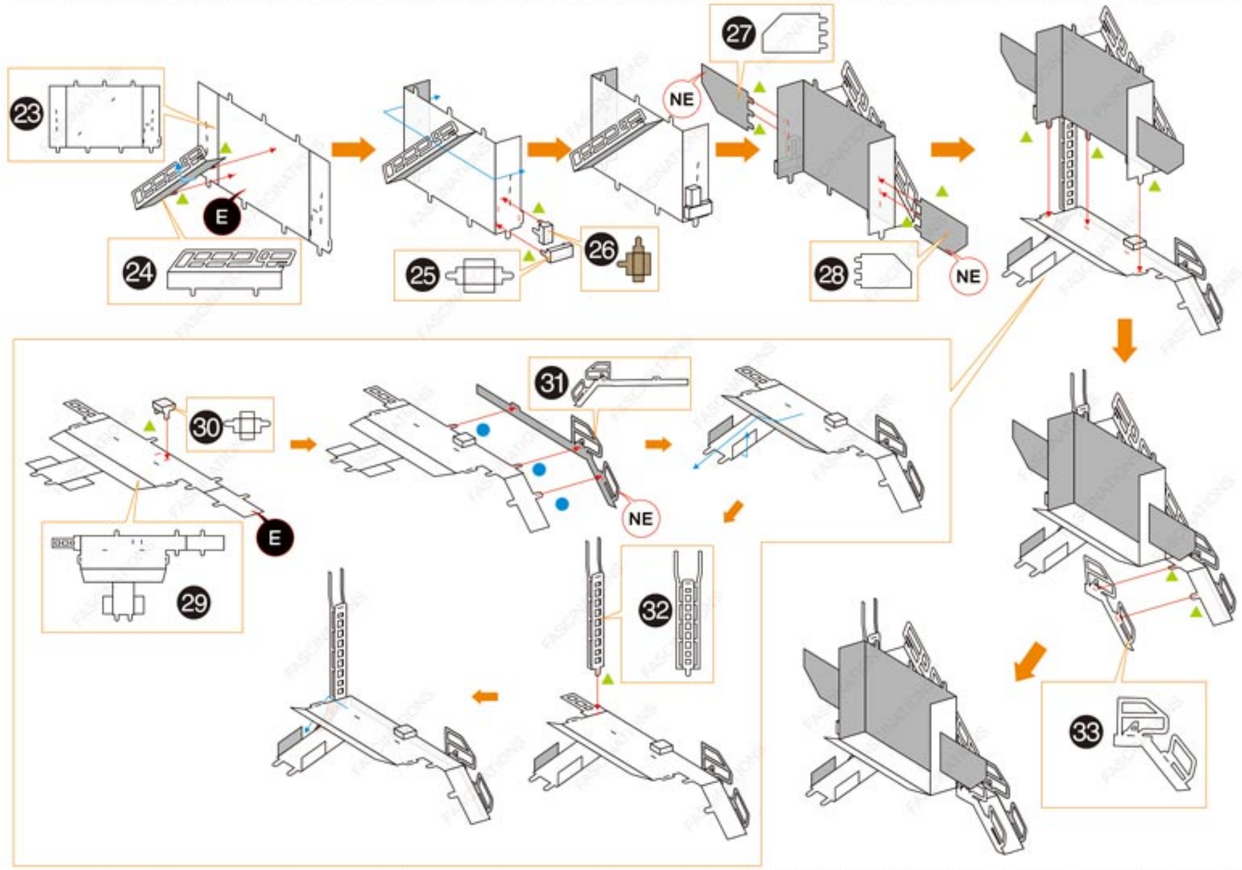
23
E
24
25
26
27
NE
28
NE
30
E
29
31
NE
32
33

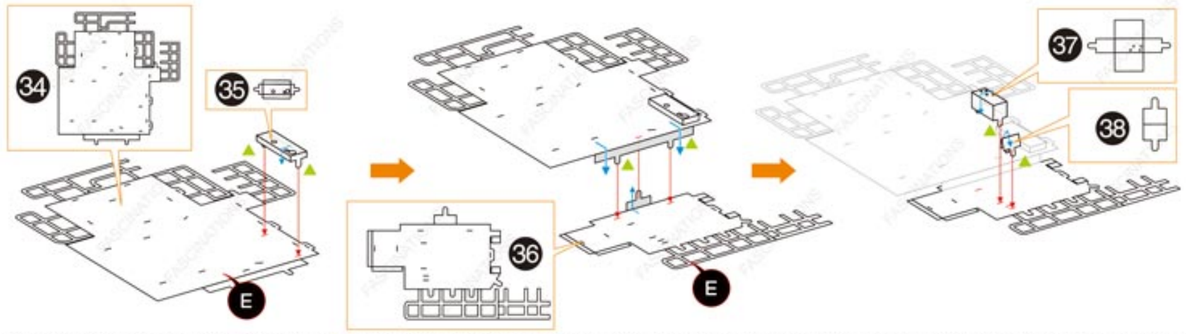
34
35
E
36
E
37
38

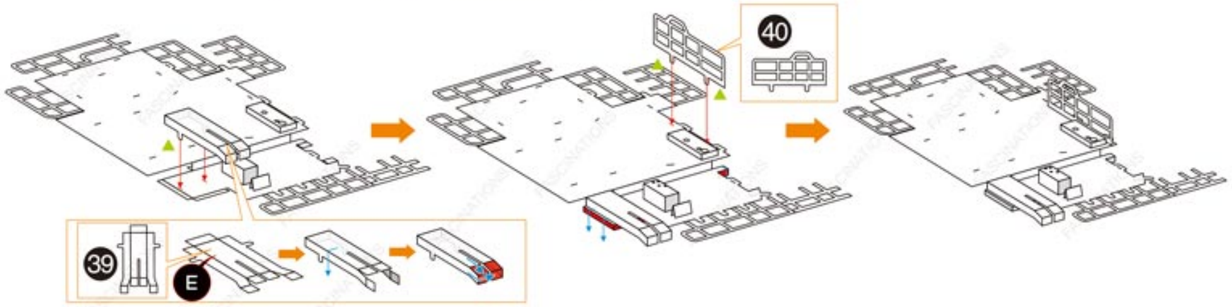
40
39
E

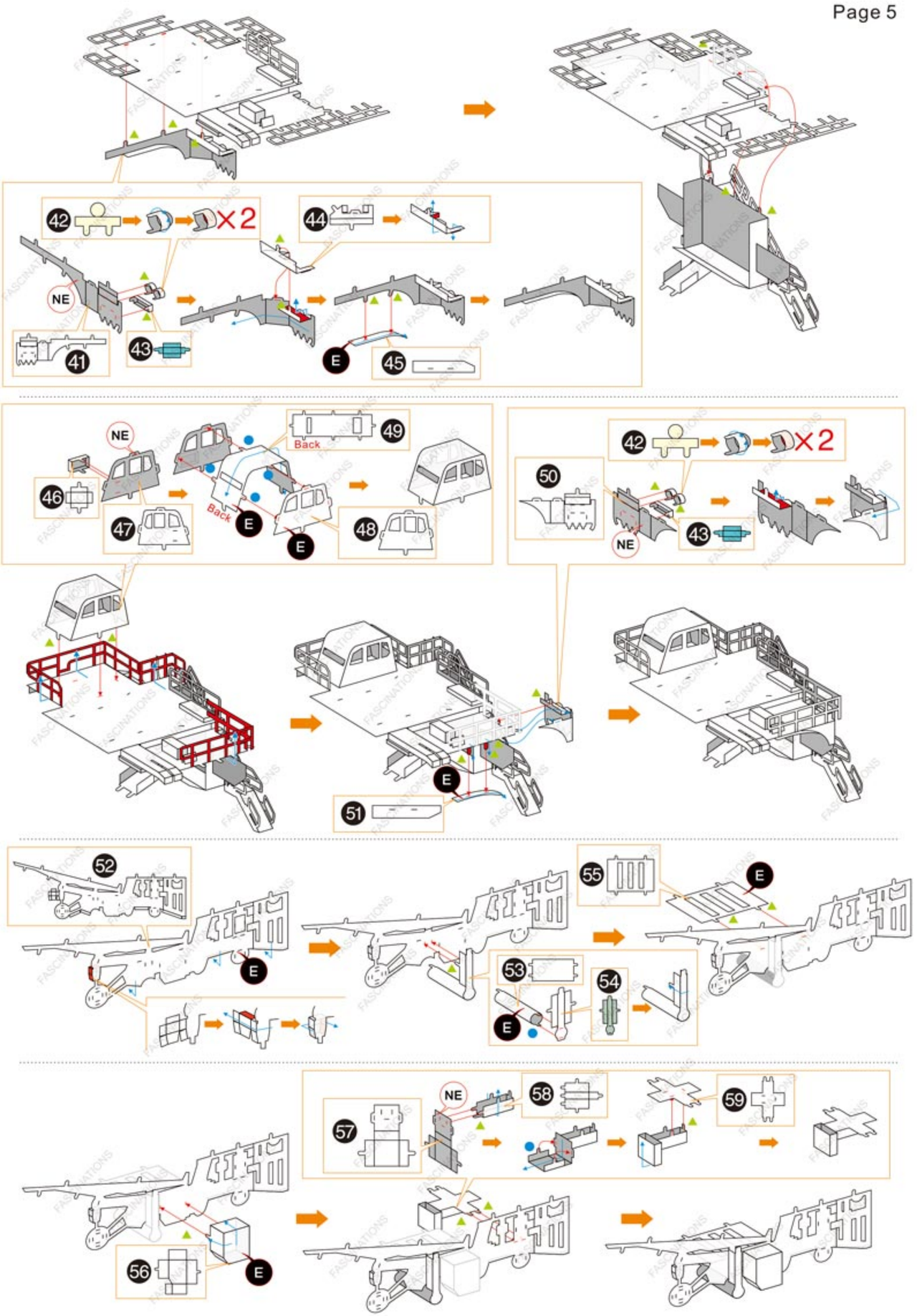
42
×2
44
NE
41
43
E
45
46
47
49
Back
48
50
51
52
53
54
55
56
57
58
59

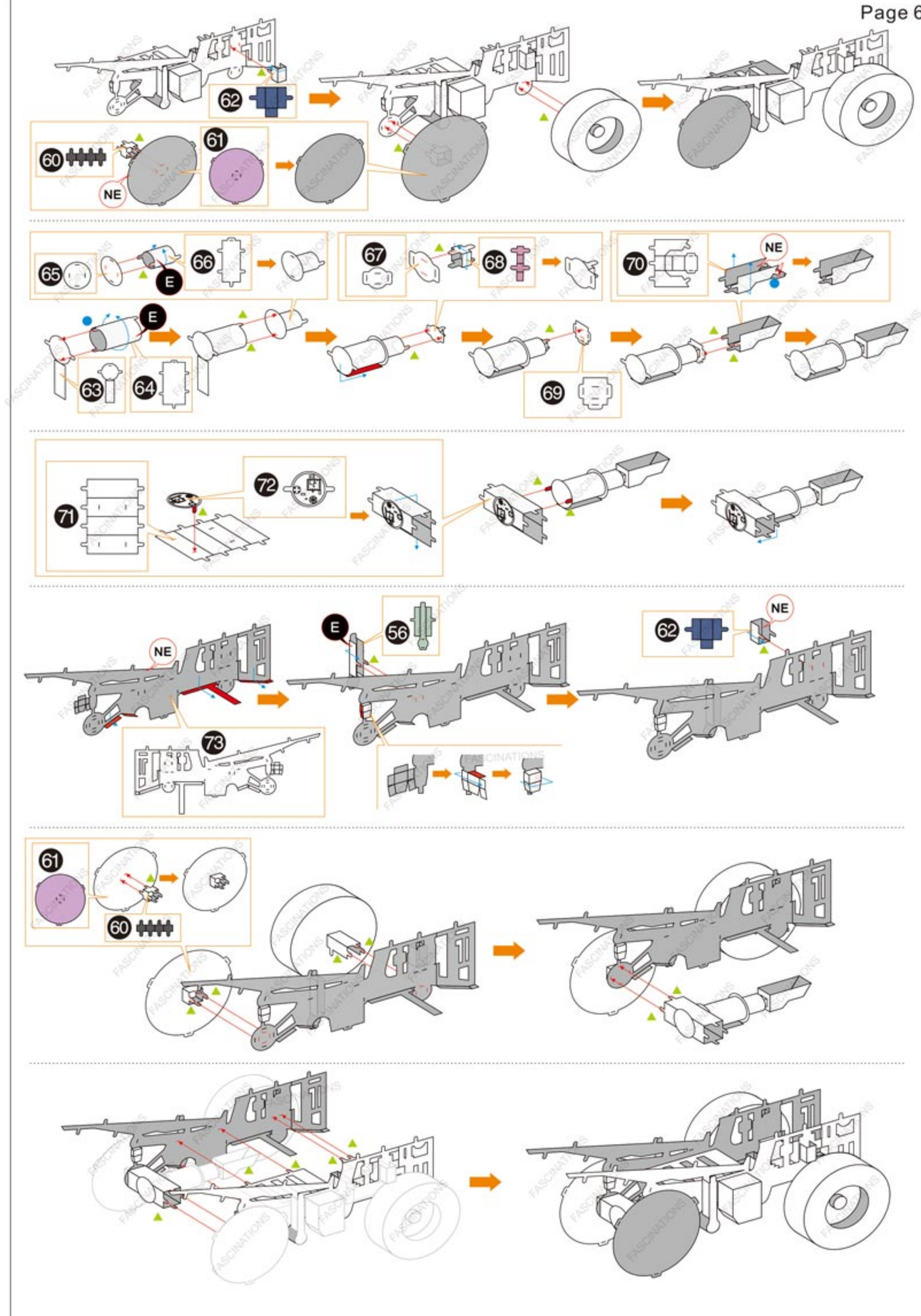
62
60
61
NE
65
66
67
68
70
63
64
69
71
72
73
56
E

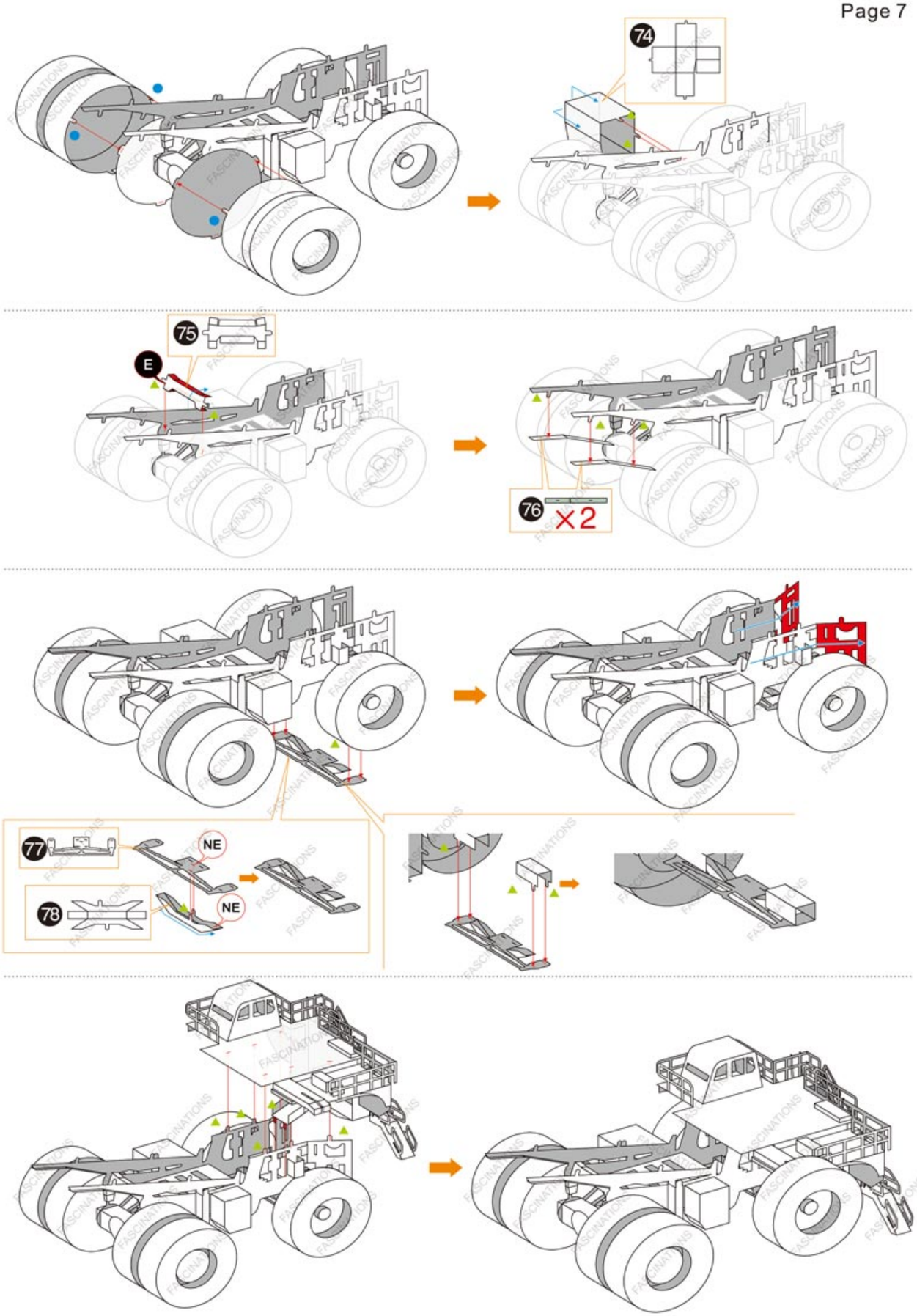

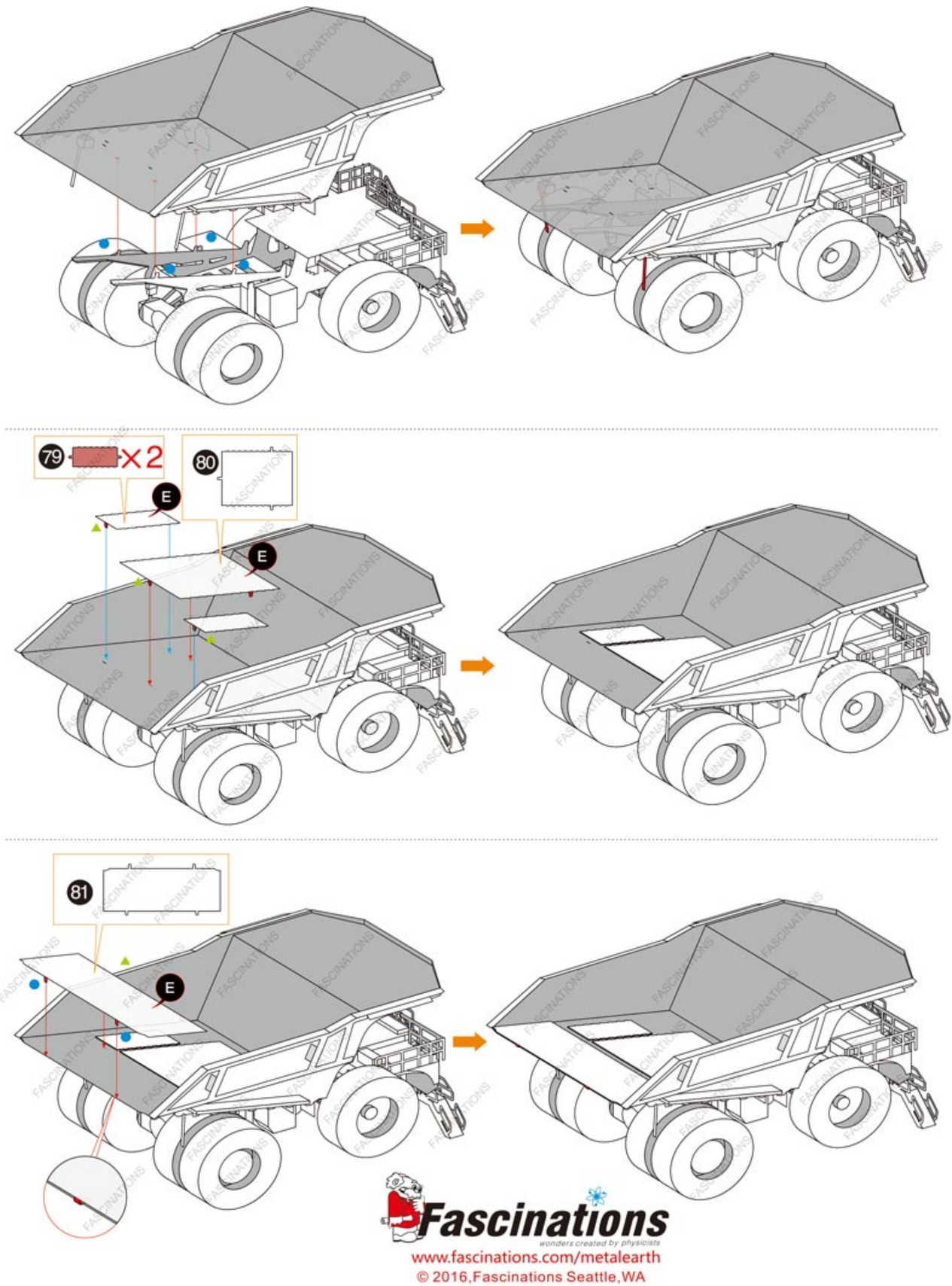

Fascinations
wonders created by physicists
www.fascinations.com/metalearth
© 2016,Fascinations Seattle,WA